INSTRUCTION MANUAL

Tektronix, Inc. ● P. O. Box 500 ● Beaverton, Oregon 97005 ● Phone 644-0161 ● Cables: Tektronix

070-1097-00

WARRANTY

All Tektronix instruments are warranted against defective materials and workmanship for one year.

Any questions with respect to the warranty, mentioned above, should be taken up with your Tektronix Field Engineer or representative.

All requests for repairs and replacement parts should be directed to the Tektronix Field Office or representative in your area. This procedure will assure you the fastest possible service. Please include the instrument Type (or Part Number) and Serial or Model Number with all requests for parts or service.

Specifications and price change privileges reserved.

Copyright © 1971 by Tektronix, Inc., Beaverton, Oregon. Printed in the United States of America. All rights reserved. Contents of this publication may not be reproduced in any form without permission of the copyright owner.

U.S.A. and foreign Tektronix products covered by U.S. and foreign patents and/or patents pending.

TABLE OF CONTENTS

		Page
SECTION 1	SPECIFICATION	
	Introduction	1-1
	Electrical Characteristics	1-1
	Environmental Characteristics	1-5
	Physical Characteristics	1-5
SECTION 2	OPERATING INSTRUCTIONS	
	Installation	2-1
	Display	2-1
	Controls and Connectors	2-1
	First-Time Operation	2-4
	General Operating Information	2-5
	Measurement Modes	2-8
	Operating Modes	2-10
SECTION 3	CIRCUIT DESCRIPTION	
	Introduction	3-1
	Block Diagram Description	3-1
	Detailed Circuit Description	3-3
SECTION 4	MAINTENANCE	
	Introduction	4-1
	Preventive Maintenance	4-1
	Troubleshooting	4-1
	Replacement Parts	4-4
	Component Replacement	4-4
SECTION 5	CALIBRATION	
	Recalibration Interval	5-1
	Test Equipment Required	5-1
	Part I — Performance Check	5-4
	Part II — Adjustment	5-12
SECTION 6	ELECTRICAL PARTS LIST	
	Abbreviations and Symbols	
	Parts Ordering Information	
SECTION 7	DIAGRAMS AND CIRCUIT BOARD ILLUSTRATIONS	
	Symbols and Reference Designators	
	Voltage and Waveform Conditions	
SECTION 8	MECHANICAL PARTS LIST	
	Mechanical Parts List Information	
	Index of Mechanical Parts Illustrations	
	Mechanical Parts List	
	Accessories	
	CHANGE INFORMATION	

Abbreviations and symbols used in this manual are based on or taken directly from IEEE Standard 260 "Standard Symbols for Units", MIL-STD-12B and other standards of the electronics industry. Change information, if any, is located at the rear of this manual.

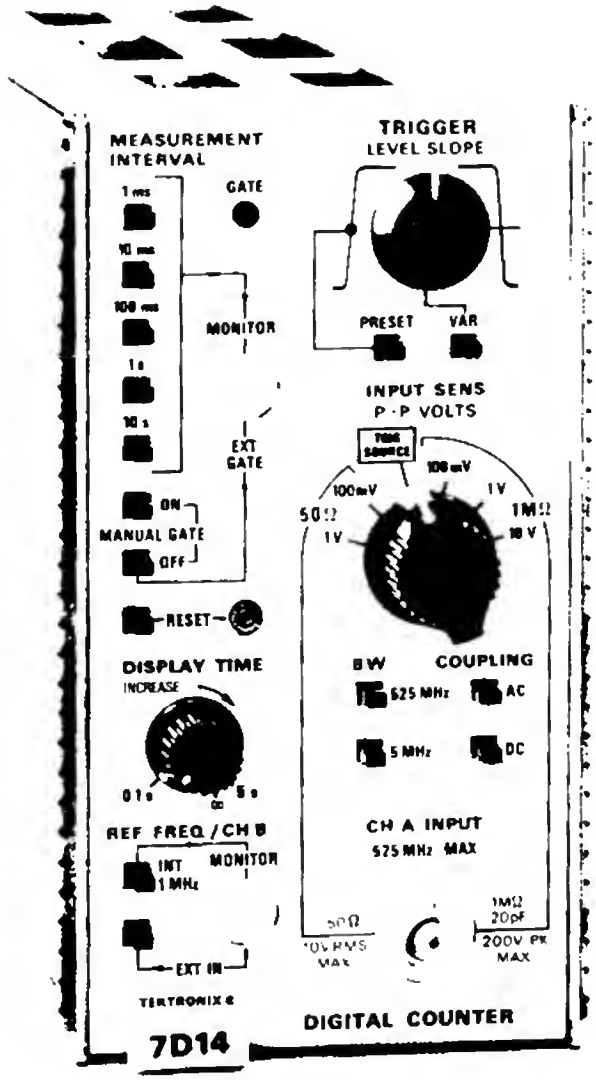

Fig. 1-1. 7D14 Digital Counter Plug-In Unit

SECTION 1
SPECIFICATION

Change information, if any, affecting this section will be found at the rear of this manual.

Introduction

The 7D14 Digital Counter plug-in unit is designed for use with Tektronix 7000-series Oscilloscopes equipped with readout system. The 7D14 uses the readout system to display an eight-digit readout on the CRT of the associated oscilloscope. The 7D14 will measure frequency from 0 to 525 megahertz, frequency ratio from 0 to 10^5:1 and totalize (count number of events) from 0 to 10^8. The 7D14 features counting capability to 525 megahertz without prescaling, input impedance of 50 ohms or 1 megohm, blanking of all zeros to the left of the most significant digit, trigger pickoff from vertical amplifier unit (which allows simultaneous signal viewing and counting, and a trigger indicator analog CRT display to view the "shaped" input signal.

The following electrical characteristics are valid for instruments calibrated at an ambient temperature between +20°C and +30°C after a 20 minute warmup period. The 7D14 should be calibrated every 1000 hours, or every six months if used infrequently.

TABLE 1-1

ELECTRICAL

Characteristic	Performance Requirement		Supplemental Information
	CHANNEL A (Count Channel) INPUT SENS P-P VOLTS Switch Setting		
	50 Ω	1 MΩ	
Frequency Range			
DC Coupled	DC to 525 megahertz	DC to 525 megahertz	
AC Coupled	200 kilohertz to 525 megahertz	5 hertz to 525 megahertz	
Sensitivity	100 millivolts peak-to-peak	100 millivolts peak-to-peak	
Input Resistance			As indicated by INPUT SENS Switch within 10%. VSWR in 50-ohm position ≤1.5:1
Capacitance	Not applicable		20 picofarads within 20% when INPUT SENS is set to 1 MΩ input impedance.

TABLE 1-1 (cont.)

Characteristic	Performance Requirement		Supplemental Information
Maximum Input Voltage	10 volts RMS	200 volts (DC + Peak AC) to 5 megahertz. 50 volts (DC + Peak AC) to 525 megahertz	
TRIG SOURCE			
Sensitivity	1.5 divisions of vertical deflection minimum		
Frequency Range	Depends upon amplifier plug-in unit and oscilloscope being used.		TRIG SOURCE is AC coupled.
BW—5 MHz	Limits upper bandwidth (—3 dB point) to 5 megahertz within 1 megahertz.		
Trigger			
PRESET			Triggers on the positive slope at 0 volt level.
VAR LEVEL			SLOPE control selects positive or negative slope triggering.
Range			
INPUT SENS Switch Setting			
100 mV	+0.5 volt to —0.5 volt		
1 V	+5 volts to —5 volts		
10 V	+50 volts to —50 volts		

MEASUREMENT INTERVAL

Internal Time Base		
Crystal Oscillator		
Frequency	5 megahertz	
Accuracy		
0°C to +50°C	Within 0.5 part per million	
Long Term Drift	1 part or less in 10^7 per month	

TABLE 1-1 (cont.)

Characteristic	Performance Requirement	Supplemental Information
Internal Gate		
Range	1 millisecond through 10 seconds	Selectable in decade steps
Resolution	Up to 0.1 hertz	
Accuracy	Within $\pm\frac{1}{\text{Total Count}}\pm$ Time Base Accuracy	
CH B		
Frequency Range	10 hertz to 2 megahertz	AC Coupled Only
Sensitivity	At least 0.8 volt peak-to-peak	Sine wave or pulse with 30%-70% duty cycle
Input		
R		10 kilohms within 20%
C		30 picofarads within 30%
Max Input Voltage	50 volts (DC + Peak AC) to 2 megahertz	
EXT GATE		
Input Requirements	Compatible with TTL Logic.	
Turn On Level	Logic "1" at least +2 Volts	
Turn Off Level	Logic "0" +500 millivolts or less	
Risetime		500 nanoseconds (Maximum)
Falltime		500 nanoseconds (Maximum)
Minimum Off Time	500 nanoseconds	
Minimum On Time	200 nanoseconds	
Propagation Delay		
+ Transition		40 nanoseconds within 20 nanoseconds
– Transition		40 nanoseconds within 20 nanoseconds
Input		
Resistance		8.2 kilohms within 20%
Capacitance		35 picofarads within 20%

TABLE 1-1 (cont.)

Characteristic	Performance Requirement	Supplemental Information
EXT GATE (cont) Max Input Voltage	±15 volts (DC + Peak AC) to 10 megahertz	
DISPLAY TIME Range		Continuously variable from 0.1 seconds or less to at least 5 seconds
Detent Position		∞ (infinite)
RESET Input Requirements	At least 2 volts positive-going pulse.	
Amplitude	Compatible with TTL Logic, Logic "0" +500 millivolts or less Logic "1" at least +2 volts	
Duration	At least 500 nanoseconds	
Input Resistance		8.2 kilohms within 10%
Capacitance		30 picofarads
Max Input Voltage	±20 volts (DC + Peak AC) to 10 megahertz	

OUTPUT SIGNALS

MONITOR INT 1 MHz Signal	Positive-going pulse from internal crystal oscillator	
Amplitude Open Circuit	5 volts within 10%	
Source Impedance		Logic "0" 1 kilohms Logic "1" 2.2 kilohms
1 ms – 10 s Signal	Time marker pulses from internal gate.	
Amplitude	TTL Logic compatible.	
Open Circuit	5 volts within 10%	

TABLE 1-1 (cont.)

Characteristic	Performance Requirement	Supplemental Information
1 ms — 10 s (cont)		
Polarity	Positive-going	
Source Impedance		Logic "0" ≈1 kilohm Logic "1" ≈5.7 kilohms
Trigger Indicator	CRT analog display of trigger output	
Display		
Amplitude	0.2 div within 25%	
Position Range		Positionable over 8 div by internal control
Usable Frequency Range		System Dependent
Signal Delay		≈5 nanoseconds

TABLE 1-2

ENVIRONMENTAL CHARACTERISTICS

Refer to the Specification for the associated oscilloscope.

TABLE 1-3

PHYSICAL

Size	Fits all 7000-series plug-in compartments.
Weight	2 Pounds 6 Ounces (1075 grams)

SECTION 2
OPERATING INSTRUCTIONS

Change information, if any, affecting this section will be found at the rear of this manual.

General

The 7D14 Digital Counter plug-in unit operates with the readout system of Tektronix 7000-series Oscilloscopes to measure frequency or frequency ratio, and to totalize (count number of events). To effectively use the 7D14, the operation and capabilities of the instrument should be known. This section describes the function and operation of the controls and connectors, and gives first-time and general operating information.

Installation

The 7D14 is designed to operate in any plug-in compartment of Tektronix 7000-series oscilloscopes. However, certain modes of operation require the 7D14 to be installed in a specific compartment. The unit must be operated in a Horizontal compartment to count a signal which is being displayed on the CRT (see Counting a Displayed Signal). Operation in a Vertical compartment is necessary to view the 7D14 Trigger Indicator Display on the CRT (see Trigger Indicator Display).

To install the 7D14 into a plug-in compartment, push the unit in until it is seated flush against the front panel of the oscilloscope. To remove, pull the release latch to disengage the 7D14. Continue to pull the release latch to remove the unit from the oscilloscope.

Display

The digital readout display for the 7D14 is presented on the CRT of the oscilloscope in which the unit is operated, along with information encoded by the other plug-in units. This display is written by the CRT beam on a time-shared basis with the analog waveform displays.

The digital display for the 7D14 will appear on the CRT in a location corresponding to the plug-in compartment used. The measurement data portion of the display will be in the top division of the CRT graticule area and the measurement units (MHz or kHz), when displayed, will appear in the bottom division.

It is not necessary to select the 7D14 with the oscilloscope Vertical or Horizontal Mode switches to view the digital display. However, in order to view the 7D14 Trigger Indicator Display, selection with the Vertical Mode switch is required.

The readout display of the measurement data consists of four to eight digits depending on the measurement being made. All zeros to the left of the most significant digit are blanked out.

The measurement units and decimal position in the display are determined by the MEASUREMENT INTERVAL pushbutton selected. When the measurement range in use is exceeded, the display is preceded by a "greater than" symbol (>).

CONTROLS AND CONNECTORS

The major controls and connectors for operation of the 7D14 are located on the front panel of the instrument. These are shown in Fig. 2-1. Two auxiliary functions are provided by controls located inside the instrument. A description of the function and/or operation of the controls and connectors follows.

Measurement Interval Controls

MEASUREMENT INTERVAL	Seven self-cancelling pushbutton switches that select internal, external, or manual gate.
1 ms – 10 s (one millisecond through 10 seconds)	Selects one of five measurement intervals from the internal time-base gates. A time-marker output with a period equal to the selected interval is provided at the MONITOR connector.
MANUAL GATE	ON: Initiates gate interval (start count), and holds the gate open for totalizing. OFF: Terminates gate interval (stop count), and starts display time. Also selects external gating signal from the EXT GATE connector.
GATE Indicator	Lights during the active gating interval.

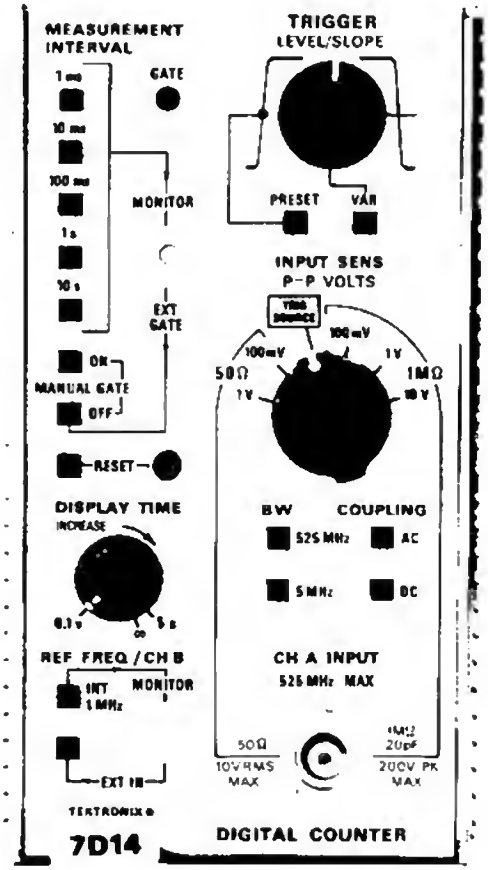

Fig. 2-1. 7D14 front-panel controls and connectors.

EXT GATE/MONITOR Connector — BSM connector for external gate input or time marker output as selected by MEASUREMENT INTERVAL pushbuttons.

Display Time Controls

DISPLAY TIME — Variable control to set the length of time the reading will be displayed after the count is made and before the next measurement is taken. Display time can be varied from 0.1 second to five seconds. ∞ (infinite) position (fully clockwise) provides continuous display until reset by an external signal or by pressing the RESET pushbutton.

RESET — Pushbutton: Manually resets the counter to zero.

Pin-jack connector: Provides input for external signal to reset the counter to zero.

Reference Frequency/Channel B Controls

REF FREQ/CH B — Pushbuttons that select the function of the EXT IN/MONITOR connector.

INT 1 MHz (Internal 1 megahertz) — Selects 1 MHz signal from internal crystal oscillator at MONITOR connector.

EXT IN (external input) — Selects external input to Channel B for an external timing standard, or for signal input for ratio measurements.

Trigger Controls

LEVEL/SLOPE — Selects the amplitude point and slope on trigger signal where counter is triggered (VAR pushbutton pressed). When the indicator line on the outer ring is to the left of center, the counter is triggered on the positive-going slope of the input signal as shown by the positive-going edge symbol. To the right of center, the counter is triggered on the negative-going slope of the input signal as shown by the negative-going edge symbol.

PRESET — Pushbutton that selects a fixed trigger point at the zero-volt level on the positive-going slope (LEVEL/SLOPE control inoperative).

VAR — Pushbutton to allow manual selection of trigger level and slope with the LEVEL/SLOPE control.

INPUT SENS/P-P VOLTS — Rotary switch that selects internal or external signal input to trigger counter and selects sensitivity.

50 Ω — Input signal provided from CH A INPUT connector at 50-ohm input impedance.

1 V: Minimum signal amplitude must be one volt or greater.

100 mV: Minimum signal amplitude must be 100 mV or greater.

1 MΩ — Input signal provided from CH A INPUT connector at one-megohm input impedance.

100 mV: Minimum signal amplitude must be 100 mV or greater.

1 V: Minimum signal amplitude must be one volt or greater.

10 V: Minimum signal amplitude must be 10 volts or greater.

TRIG SOURCE — Input signal provided from the indicator oscilloscope trigger pickoff circuitry. (This mode of operation enables simultaneous counting and CRT display of a signal. For more information, see Counting a Displayed Signal.)

BW (bandwidth) — Pushbutton switches that select the bandwidth of the trigger input circuits (affects signals from internal TRIG SOURCE and CH A INPUT connector).

500 MHz: Selects full bandwidth capability.

5 MHz: Limits upper bandwidth to about 5 megahertz (–3 dB point).

COUPLING — Pushbutton switches that select the method of coupling the signal from the CH A INPUT connector to the trigger circuits (does not affect signals from internal TRIG SOURCE).

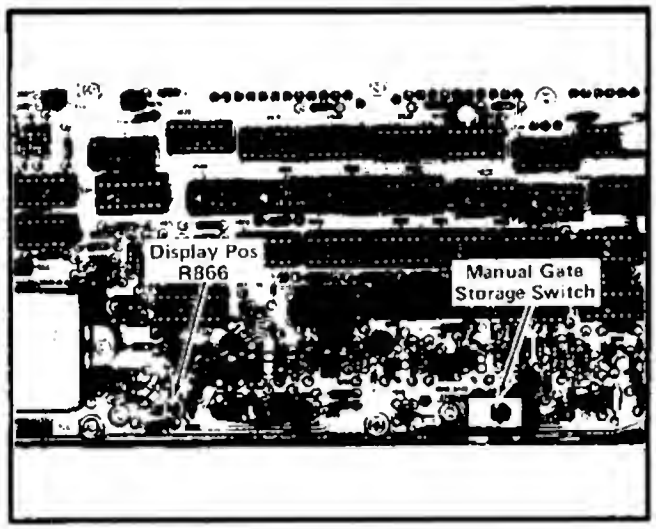

Fig. 2-2. Manual Gate Storage switch and Display Pos adjustment.

AC: Selects capacitive coupling to block DC signal components. This switch position is used for most signal measurements.

DC: Selects direct coupling to pass all components of the signal from DC to the upper limit of the unit. This switch position is used mainly for DC and low-frequency signals.

CH A INPUT (BNC connector) — Input connector for external signals.

Internal Controls

See Fig. 2-2

Man Gate Storage Slide switch — Selects manual gate storage mode (use with MANUAL or EXT GATE).

OFF (forward): Readout display follows the counter.

ON (rear): Readout display is updated at the end of each gate interval.

Display Pos — Variable control to set the Trigger Indicator Display vertical position.

FIRST-TIME OPERATION

General

When shipped from the factory, the 7D14 has been calibrated to meet the specifications listed in Section 1 and is ready to be used with a readout-equipped Tektronix 7000-series Oscilloscope.

The following First-Time Operation procedure demonstrates the basic operation of the 7D14 controls. It is recommended that this procedure be followed completely for familiarization with the instrument.

NOTE

The First Time Operation procedure along with Table 2-1 can be used to provide a confidence check of the instrument's operation. These steps should be performed each time the 7D14 is placed in a different oscilloscope, and before each use.

Preliminary Instructions

1. Install the 7D14 in any available plug-in compartment of a 7000-series oscilloscope (referred to in this procedure as the Indicator Oscilloscope).

2. Connect the oscilloscope to a power source which meets the frequency and voltage requirements of the Indicator Oscilloscope power supply.

3. Turn the oscilloscope power on and allow about twenty minutes warmup time.

4. During the warmup period, set the controls as follows:

INDICATOR OSCILLOSCOPE

Intensity	Counterclockwise
Readout	Off

Any controls not mentioned can be set as desired.

7D14

MEASUREMENT INTERVAL	10 s
DISPLAY TIME	Midrange
REF FREQ/CH B	INT 1 MHz
TRIGGER	PRESET
INPUT SENS/P-P VOLTS	1 MΩ/1 V
BW	5 MHz
COUPLING	AC

Digital Display Check

5. Advance the Readout control until a readout display is observed. Adjust the oscilloscope Focus and Astigmatism controls for a well defined display.

6. Connect the 1 MHz signal from the EXT IN/MONITOR connector to the CH A INPUT connector with a BSM male to BNC female adapter and a 50-ohm BNC cable.

7. The readout display should read 1000.0000 kHz ±1 count (999.9999 to 1000.0001 kHz).

8. Check that the GATE indicator light is on during the time the 7D14 is counting (10 seconds).

9. Sequentially press the MEASUREMENT INTERVAL 1 s through 1 ms pushbuttons and check that the display corresponds to the readings given in Table 2-1.

TABLE 2-1

OPERATING CHECK DISPLAY

MEASUREMENT INTERVAL	READOUT LIMITS		UNITS
	MINIMUM	MAXIMUM	
10 s	999.9999	1000.0001	kHz
1 s	999.999	1000.001	kHz
100 ms	0.99999	1.00001	MHz
10 ms	0.9999	1.0001	MHz
1 ms	0.999	1.001	MHz

10. Disconnect the cable and the adapter.

GENERAL OPERATING INFORMATION

Signal Connection

In general, probes offer the most convenient means of connecting signals to the 7D14 CH A INPUT. Tektronix probes are shielded to prevent pickup of electrostatic interference. A 10X attenuation probe offers a high input impedance and allows the circuit under test to perform very close to normal operating conditions. Also, a 10X probe attenuates the input signal ten times.

Tektronix probes are designed to monitor the signal source with minimum circuit loading. The use of a probe will, however, limit the maximum bandwidth capability of the 7D14. To obtain maximum bandwidth when using probes, use a probe capable of compensating 20 pF; use one of the 1 MΩ input impedance positions of the INPUT SENS/P-P VOLTS switch; and observe the grounding considerations given in the probe manuals. The probe-to-connector adapters and the bayonet-ground tip provide the best frequency response.

In high-frequency applications requiring maximum overall bandwidth, use a coaxial cable for the signal connection and a 50 Ω input impedance position of the INPUT SENS/P-P VOLTS switch. To maintain the high-frequency characteristics of the applied signal, use high-quality, low-loss cable. Resistive attenuators can be used to minimize reflections if the applied signal has suitable amplitude.

A signal can also be routed to the 7D14 through an amplifier unit in a vertical plug-in compartment via the internal trigger pickoff circuitry of the indicator Oscilloscope. This method of signal connection minimizes circuit loading for measurements requiring simultaneous counting and CRT display (see Counting a Displayed Signal).

General Control Settings

Introduction. The following discussion provides control setup information for general measurement applications. Further information can be found under Controls and Connectors or in the discussion for a specific measurement mode (e.g., Frequency Measurements).

Trigger Controls. Signals to be counted may have a wide variety of shapes and amplitudes, many of which are unsuitable to drive the counting circuits. For this reason, the signals are first applied to signal conditioning circuits; then to the trigger circuit, where they are converted to rectangular pulses of uniform amplitude.

Signals often have characteristics which would prevent triggering or result in an erratic count. These signals must be conditioned before they are applied to the trigger input. The INPUT SENS, COUPLING, and BW switches provide means of conditioning the trigger signal. Obtaining a steady, reliable reading is dependent upon the proper setting of these controls and proper adjustment of the LEVEL/SLOPE control.

The INPUT SENS/P-P VOLTS switch selects either internal routing of the signal from the Indicator Oscilloscope trigger circuitry or connection through the CH A INPUT connector. Operation in the TRIG SOURCE position requires that the 7D14 be installed in a horizontal plug-in compartment. The oscilloscope Trigger Source switch for that horizontal channel then provides further selection of the signal source. (For more information on this mode of operation, see Counting a Displayed Signal.)

For signals connected to the CH A INPUT connector, set the INPUT SENS/P-P VOLTS switch to select the desired input impedance. An input impedance of 50 Ω should be used when coupling into a 50-ohm system for high-frequency measurements. The 1 MΩ settings provide a higher input impedance for minimizing loading on the signal source.

Select a P-P VOLTS setting appropriate to the amplitude of the signal being measured. The P-P VOLTS figure on the front panel indicates the minimum signal amplitude which will produce a count. The best P-P VOLTS setting is one that is much larger than the largest noise signal anticipated,

but where the signal is sufficiently larger than the P-P VOLTS setting to ensure a steady count. Generally, begin with the largest P-P VOLTS setting. Then decrease the switch setting if necessary to obtain a steady count.

The COUPLING switch determines the coupling between the CH A INPUT connector and the trigger circuit. Generally, use AC coupling to block the DC component of a signal. Otherwise, the DC component might cause the signal level to be beyond the range of the LEVEL/SLOPE control. DC coupling can be used for low-frequency signals, or for pulses with known DC levels. See Table 1-1 in the Specification section for the frequency range and amplitude limits for each coupling method. The COUPLING switch does not affect signals selected via the TRIG SOURCE position of the INPUT SENS switch.

The BW switch provides a means of filtering out high-frequency noise pulses which may cause erratic readings. Generally, use the 5 MHz setting unless the signal to be counted is above this frequency. The BW switch affects signals connected through both the internal TRIG SOURCE and the CH A INPUT connector.

The trigger circuit has a hysteresis (basic sensitivity) of approximately 100 millivolts. A typical signal waveform at the input to the trigger is shown in Fig. 2-3A. The hysteresis of the trigger is represented by the shaded area. Each time the signal level (including DC level) rises above the upper hysteresis limit e_2, and falls below the lower hysteresis limit e_1, the trigger circuit produces a rectangular waveform as shown in Fig. 2-3B. This rectangular waveform is the signal actually counted by the counting circuits.

Generally, the best point on a waveform for triggering the counter is where the slope is steep, and therefore usually free of noise Assuming a sine-wave signal waveform, the steepest slope occurs at the zero-crossing point.

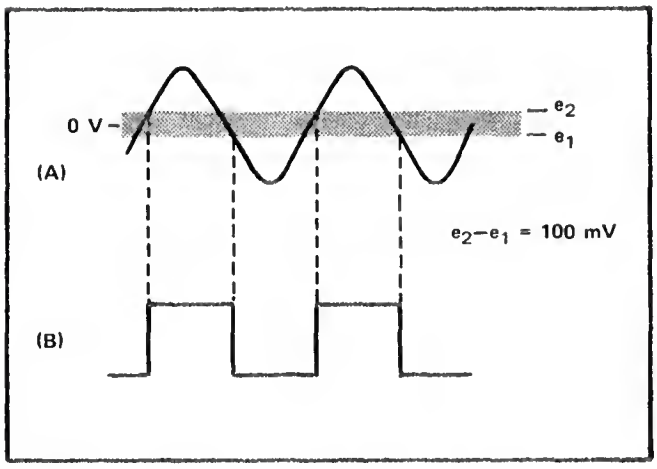

Fig. 2-3. (A) Signal input to trigger; shaded area represents trigger hysteresis with PRESET button depressed. (B) Trigger output.

This is the point on the positive-going slope selected for triggering when the PRESET pushbutton is pressed, and is the condition represented in Fig. 2-3A and B.

Noise pulses or other signal components may be presented which are of sufficient amplitude to produce unwanted trigger pulses. A typical condition is represented in Fig. 2-4A. The resulting trigger pulses shown in Fig. 2-4B will cause an erratic or incorrect count.

Pressing the VAR pushbutton enables the LEVEL/SLOPE control to be used to move the hysteresis above or below the 0-volt level. The condition represented in Fig. 2-4A and B can be corrected by using the LEVEL/SLOPE control to move the hysteresis to a level above or below the

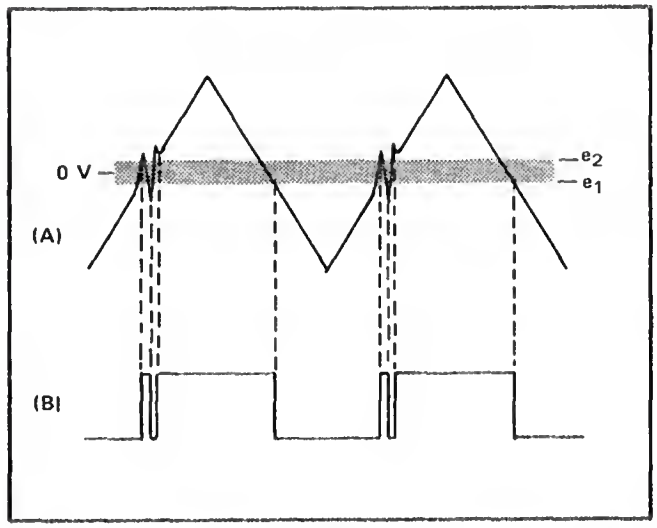

Fig. 2-4. (A) Input signal with noise in PRESET hysteresis level; and (B) resultant trigger output.

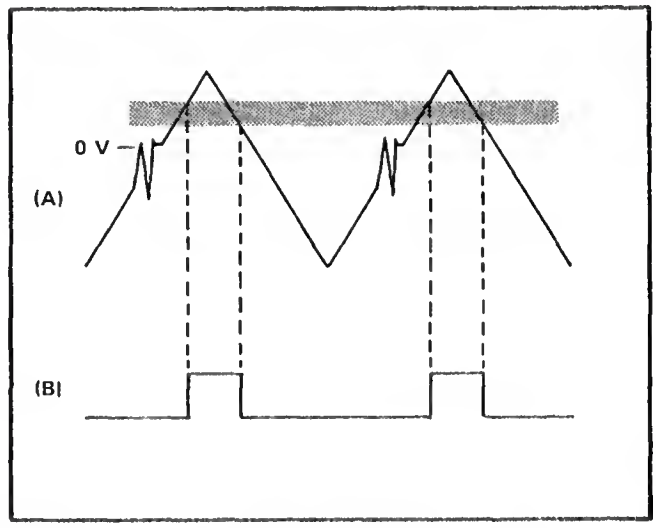

Fig. 2-5. (A) Signal input to trigger; shaded area represents hysteresis set above noise pulses. (B) Resultant Trigger output.

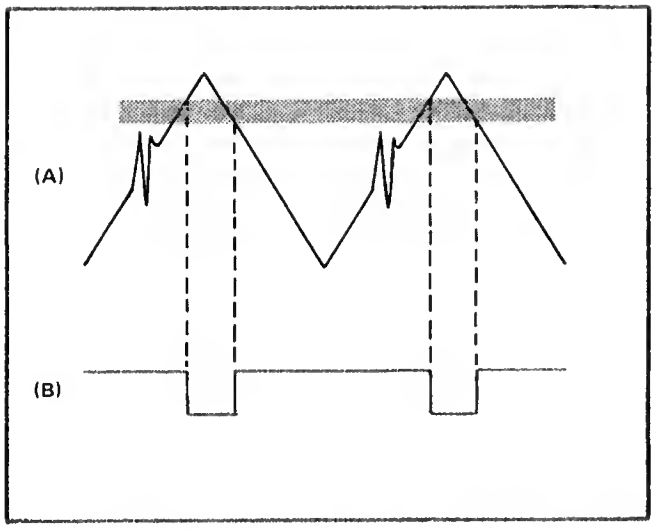

Fig. 2-6. (A) Signal input to trigger; shaded area represents hysteresis set above noise pulses; (B) Trigger output with LEVEL/SLOPE control set in negative-slope region.

noise. Fig. 2-5A shows the signal with the hysteresis moved above the noise with the corrected trigger output shown in B. Fig. 2-6A and B shows the same waveforms as in Fig. 2-5, only with the LEVEL/SLOPE control set in the negative slope region. Note that the trigger pulse shown in Fig. 2-6B goes positive when the signal input goes negative.

Measurement Interval Controls. The MEASUREMENT INTERVAL switch selects the time interval (also called gate time) during which the 7D14 counts. The source of the pulses which control the time interval determines the measurement mode.

The internal gate circuits derive gate times from a one megahertz reference frequency signal to make frequency measurements. The gate times thus derived are selected by the 1 ms, 10 ms, 100 ms, 1 s, and 10 s pushbuttons. The measurement interval selected determines the measurement range and resolution. These pushbuttons also automatically select the measurement units and decimal position in the display. Table 2-2 gives the frequency range and resolution for each time interval, and shows the display decimal position and measurement units.

Generally, use the shorter measurement intervals for high-frequency, low-resolution measurements and the longer intervals for measurements requring high resolution.

Totalizing, or counting a number of events, is accomplished by counting during a time selected by the MANUAL GATE ON/OFF pushbuttons. The gate time is started by pressing the MANUAL GATE ON pushbutton, and stopped by pressing the OFF button. The manual mode is generally used to count a number of events for a relatively long, indefinite time. The 7D14 can be set to display the total count at the end of the gate time or to display each count as it is made. Also, the 7D14 can add the counts made during successive gate times. (For further information, see Totalize under Measurement Modes.)

An external gating signal can be used to control the gate time or measurement interval. The gating signal is connected to the EXT GATE connector and is selected by pressing the MANUAL GATE OFF pushbutton. See the Specification section for external gate signal requirements.

REF FREQ/CH B controls. The INT 1 MHz pushbutton selects the internal crystal oscillator for use as a reference signal for frequency measurements. The one megahertz signal is available at the front-panel EXT IN/MONITOR connector when the INT 1 MHz button is pressed in.

When greater accuracy is required than is provided by the internal crystal oscillator, a one megahertz external timing standard can be connected to the EXT IN/MONITOR connector. Pressing the EXT IN pushbutton selects the signal connected to the EXT IN connector.

The EXT IN connector and pushbutton are also used for making ratio measurements. The 7D14 will compare the frequency of the signal connected to the EXT IN connector to the frequency of the Channel A signal. (For further information, see Ratio Measurements under Measurement Modes.)

Display Time Controls. The DISPLAY TIME control is used to set the length of time a measurement is displayed before the next measurement is started. The display time can be varied from at least 0.1 second to five seconds or longer.

The ∞ (infinite) detent position of the DISPLAY TIME control sets the 7D14 to display the last measurement indefinitely, or until reset by the RESET pushbutton or an external signal.

The display time circuit is locked to the 1 ms through 10 s MEASUREMENT INTERVAL pushbuttons so that the total display time is the sum of the DISPLAY TIME control setting and the measurement interval selected.

When used with manual gate operation, the DISPLAY TIME control determines when to totalize the counts made during separate gate intervals (for further information, see Totalize under Measurement Modes).

MEASUREMENT MODES

Introduction

The 7D14 has three primary measurement modes: frequency, ratio, and totalize (number of events). The following discussion gives general information about each mode and instructions on making the measurements.

Frequency Measurements

The 7D14 provides direct measurement of the average frequency of signals up to 525 MHz. The input to the counting circuits is selected by the INPUT SENS/P-P VOLTS control from either the signal connected to the CH A INPUT connector or the internal trigger pickoff signal from the Indicator Oscilloscope trigger circuits. (TRIG SOURCE; see Counting a Displayed Signal).

The 7D14 counts the input pulses over an interval selected by the MEASUREMENT INTERVAL 1 ms through 10 s pushbuttons. The measurement interval selected determines the measurement range and resolution. These pushbuttons also automatically select the measurement units and decimal point position in the display. Table 2-2 gives the frequency range and resolution for each time interval and shows the display decimal point position and measurement units.

Generally, use the shorter measurement intervals for high-frequency, low-resolution measurements and the longer intervals for measurements requiring high resolution.

Greater Accuracy. For greater accuracy and/or stability when measuring frequency, an external 1 MHz crystal signal can be substituted for the internal time-base oscillator. The external signal must have greater accuracy than the internal oscillator (see Specification section) and have a minimum amplitude of 0.8 volt peak-to-peak.

TABLE 2-2

MEASUREMENT INTERVAL DATA

MEASUREMENT			MAXIMUM
INTERVAL	UNITS	RESOLUTION	FREQUENCY
1 ms	MHz	1 kHz	525.000 MHz
10 ms	MHz	100 Hz	525.0000 MHz
100 ms	MHz	10 Hz	525.00000 MHz
1 s	kHz	1 Hz	99999.999 kHz[1]
10 s	kHz	0.1 Hz	9999.9999 kHz[1]

[1] If the maximum frequency is exceeded, a "greater than" symbol (>) will precede the readout display.

Connect the external signal to the REF FREQ/CH B EXT IN connector and press the EXT IN pushbutton. The function of the MEASUREMENT INTERVAL 1 ms – 10 s pushbuttons is the same as when using the internal time-base oscillator.

Ratio Measurements

Ratio measurements compare the frequencies of two signals. Normally, the higher frequency signal is applied to Channel A (via CH A INPUT connector or internal TRIG SOURCE) and the lower frequency signal is applied to Channel B (via EXT IN connector with the REF FREQ/CH B EXT IN pushbutton pressed). The MEASUREMENT INTERVAL 1 ms through 10 s pushbuttons select the counting time as derived from the signal applied to Channel B. The 7D14 then counts the pulses derived from the Channel A signal during a time interval established by the Channel B signal.

The display ratio measurement is equal to:

$$\frac{\text{Frequency Channel A}}{\text{Frequency Channel B}} \times 10^{6} \times \text{MEASUREMENT INTERVAL}$$

whose denominator is known to be 1. Thus, a ratio of 30.000:1 will be displayed as 30.000. The decimal point in a ratio measurement display is correctly positioned only when using the 1 ms, 10 ms, or 100 ms MEASUREMENT INTERVAL pushbuttons. Readings obtained when the 1 s or 10 s buttons are pressed must be multiplied by 10^{-3} to correct the decimal position.

Ratio measurements are dimensionless (i.e., no measurement units); however, the MHz or kHz legend will remain displayed.

Totalize (Count Number of Events)

Introduction. The 7D14 will count the number of pulses applied to Channel A (via the CH A INPUT connector or TRIG SOURCE) up to 99,999,999 pulses at a rate not to exceed 525 megahertz. The pulses will be counted during a time interval (gate time) determined either by the MANUAL GATE ON/OFF pushbuttons or by a gating signal connected to the EXT GATE input connector. Overranging (count exceeding 99,999,999) is indicated by a "greater than" symbol (>) preceding the digital readout.

Display Storage Modes. Two modes of displaying the count can be selected when using MANUAL or EXT GATE operation. These modes are selected by the Man Gate Storage switch.

With the Man Gate Storage switch ON, the total count is displayed at the end of the gate or count interval.

This is the mode normally used for EXT GATE applications when counting a number of events within short, repetitious gate times. The advantage of using the storage ON mode is that no display flicker is observed during the count cycle. The last measurement taken remains displayed until the next measurement has been completed and is ready to be displayed. This is the same mode used when making frequency measurements with the gate time determined by the 1 ms through 10 s pushbuttons.

In the storage OFF mode, each count is displayed as it occurs; thus, the display always indicates the total count at that time. This mode is normally used with MANUAL GATE operation when counting a number of events over a relatively long, indefinite time. A typical application would be counting items passing a transducer or an assembly line.

Display Time. In the usual application (MANUAL GATE operation only), in which pulses are counted over one interval only, the DISPLAY TIME control functions in its usual manner; i.e., the display will be reset to zero after the display time has elapsed. However, if it is desired to add one interval to the next (totalize the count), the DISPLAY TIME control should be set to ∞. The same effect will be obtained whenever another gate interval is initiated before the display time has elapsed.

In EXT GATE applications, where the gate times are repetitious, the external gating signal is locked to the display timer circuitry. Thus, after one measurement has been taken, another gate interval will not be initiated until the completion of either the display time or the gate "off" time, whichever is longer. In this way, one interval is not added to another.

Using the MANUAL GATE. To make a count measurement using the MANUAL GATE ON/OFF pushbuttons, proceed as follows:

1. Set the internal MAN GATE STORAGE switch for the desired mode. (The OFF position is usually used for long gate intervals.)

2. Install the 7D14 in any available plug-in compartment of the Tektronix 7000-series oscilloscope.

3. Turn the oscilloscope power on. Allow about 20 minutes warmup.

4. Advance the oscilloscope Readout control to obtain a usable readout display.

5. Connect the input signal to the CH A INPUT connector.

6. Set the INPUT SENS/P-P VOLTS, COUPLING, BW, and TRIGGER LEVEL/SLOPE controls as necessary to obtain a steady count.

7. Set the DISPLAY TIME control to ∞ (fully clockwise).

8. Depress the MANUAL GATE ON pushbutton and the counter will start counting. If necessary, press the RESET pushbutton so that the count will start from zero.

9. To terminate the count, depress the OFF button.

Using the External Gate. To make a count measurement using an external gating signal, proceed as follows:

1. Set the internal Man Gate Storage switch for the desired mode. (The ON position is usually used for short gate intervals.)

2. Install the 7D14 in any available plug-in compartment of a Tektronix 7000-series oscilloscope.

3. Turn the oscilloscope power on. Allow about 20 minutes warmup.

4. Advance the oscilloscope Readout control to obtain a usable readout display.

5. Connect the input signal to the CH A INPUT connector.

6. Connect the external gating signal to the EXT GATE input connector through the BSM to BNC male adapter (supplied accessory). The external gating signal must meet the input requirements as given in Section 1 of this manual.

7. Set the 7D14 TRIGGER controls as necessary to obtain a steady count.

The external gate function can be used in conjunction with a delayed sweep to count the quantity of pulses within a burst. The 7D14 external gate input is driven by the delayed-sweep gate output to count the number of pulses within the delayed-sweep time (intensified zone). To use this function, proceed as follows:

1. Set the internal Man Gate Storage switch for the desired mode. (The ON position is usually used for short gate intervals.)

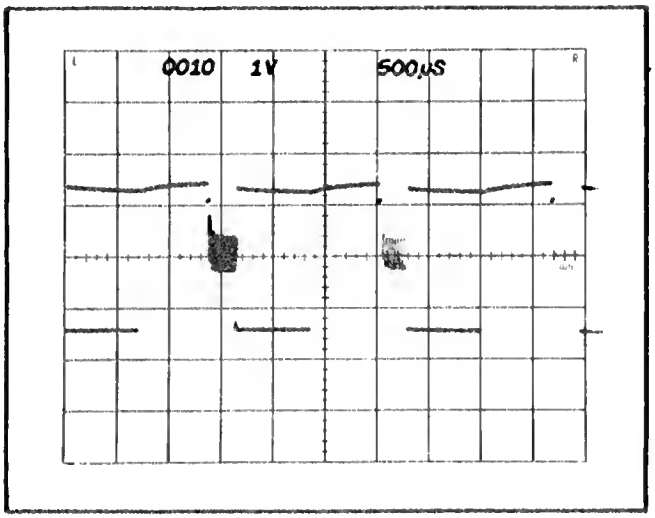

Fig. 2-7. Counting the number of pulses within a burst.

2. Install the 7D14 in a vertical plug-in compartment.

3. Connect the input signal to the CH A INPUT and amplifier unit input connectors via a BNC T connector and short BNC cable.

4. Connect the delayed gate output to the EXT GATE connector through a BSM to BNC male adapter (supplied accessory).

5. Press the MANUAL GATE OFF pushbutton.

6. Turn the oscilloscope power on. Allow about 20 minutes warmup.

7. Advance the oscilloscope Readout and Intensity controls as necessary to obtain a usable display.

8. Set the delaying time-base unit Time/Div control to view several cycles of the input-signal waveform as shown in Fig. 2-7.

9. Set the delaying time-base unit Delay Time Mult and the delayed time-base Variable Time/Div controls to intensify the pulses to be counted (see Fig. 2-7).

10. Set the 7D14 TRIGGER controls as necessary to obtain a steady count.

OPERATING MODES

Counting a Displayed Signal

This mode of operation enables simultaneous counting and CRT display of a signal. The CRT display is obtained in the usual manner; i.e., the signal is connected to an amplifier unit in a vertical plug-in compartment and a time-base unit in a horizontal compartment provides the sweep. The signal is routed to the 7D14 from the amplifier unit trigger pickoff through the oscilloscope trigger source selection circuitry. This necessitates operating the 7D14 in one of the horizontal compartments of an oscilloscope which can accommodate four plug-in units.

The INPUT SENS/P-P VOLTS switch selects the signal from the amplifier unit when it is set to TRIG SOURCE. The Trigger Source switch for the horizontal compartment containing the 7D14 must be set to select the vertical compartment originating the signal to be counted. In addition, dual-trace amplifier units contain further trigger source selection. This must be set to select the correct channel.

Signals selected in the TRIG SOURCE position are AC coupled which limits the low-frequency response. The high-frequency response is limited by the bandwidth of the amplifier unit being used.

This mode of operation is more convenient for simultaneous measurements than using separate probes for counter and oscilloscope. Also, one signal connection places less load on the circuit under test than if separate probes were used. An added advantage is being able to use the amplifier unit to amplify signals whose amplitude would otherwise be insufficient to trigger the 7D14.

Trigger Indicator

The output of the 7D14 trigger circuit can be displayed on the CRT, along with the signal being counted. The 7D14 controls can then be adjusted while observing the CRT display for triggering at the desired point on the waveform.

To use this mode of operation, the 7D14 must be operated in a vertical plug-in compartment. The signal to be measured is connected to the CH A INPUT connector and to the input of the other vertical unit using a T connector. The two waveforms can then be displayed by setting the oscilloscope Vertical Mode to Alt or Chop.

The "Trigger Indicator" is a rectangular waveform display with a nominal amplitude of 0.2 division peak-to-peak. Proper triggering is indicated when the "Trigger Indicator" waveform matches the signal waveform frequency and duty cycle as shown in Fig. 2-8.

The Trigger Indicator display vertical position is set to the CRT center at the factory. However, the display can be positioned for the convenience of the operator with the internal Display Pos adjustment R866 (see Fig. 2-2). To make this adjustment, use the following procedure:

1. Remove the Indicator Oscilloscope left cover and the 7D14 left side shield.

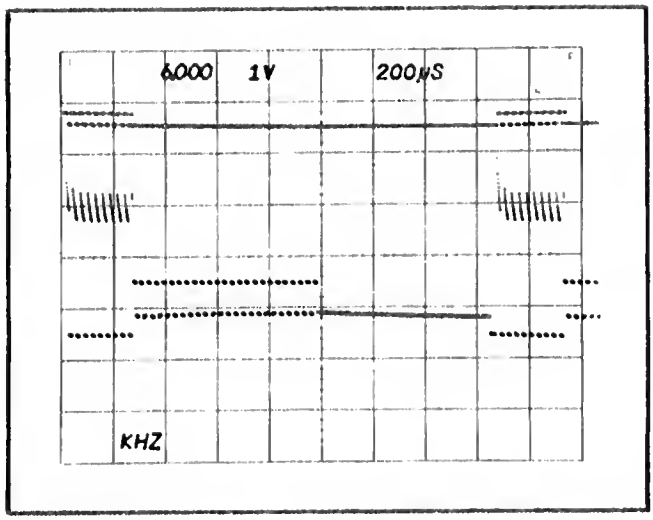

Fig. 2-8. Upper trace: Trigger Indicator waveform; lower trace: input signal waveform.

2. Install the 7D14 in the Indicator Oscilloscope left vertical plug-in compartment.

3. Connect the input signal to the 7D14 CH A INPUT and amplifier unit Input connectors using a BNC T connector and short BNC cable.

4. Set the Indicator Oscilloscope Vertical Mode switch to Chop.

5. Adjust the Display Pos adjustment R866 to position the Trigger Indicator display as desired.

At higher frequencies, care should be taken that the delays to the vertical plates of the CRT match reasonably well. If these delays are not the same, the presentation will not be a correct indication of the triggering point. A delay cable between the CH A INPUT connector and the T connector can be used to adjust the delay difference between the 7D14 and the amplifier unit.

SECTION 3
CIRCUIT DESCRIPTION

Change information, if any, affecting this section will be found at the rear of this manual.

Introduction

This section of the manual contains a description of the circuitry used in the 7D14 Digital Counter Plug-In. The description starts with a block diagram. Following the block diagram description is a discussion of the control signals generated within the instrument. After the control signals discussion is a more detailed circuit description, particularly for circuits unique to this instrument. If more information is desired on commonly used circuits, refer to the following textbooks:

Jacob Millman and Herbert Taub, "Pulse, Digital, and Switching Waveforms", McGraw-Hill, New York, 1965.

Tektronix Circuit Concepts Book (order from your local Tektronix Field Office or representative):

Digital Concepts, Tektronix Part No. 062-1030-00.

Following the detailed circuit description is a brief discussion of the readout system used in Tektronix 7000-series Oscilloscopes. If more information is desired on the readout system, refer to the instruction manual for the oscilloscope.

Logic Fundamentals

Signal lines in this instrument are named to indicate the state at which their particular function is performed. For example, the line labeled "RESET" means that the affected circuit(s) is reset when this line is HI; the line labeled "$\overline{\text{DCU RESET}}$". (DCU RESET — NOT) means that the affected circuits are reset when this line is LO.

Digital logic techniques are used to perform many functions within this instrument. The function and operation of the logic circuits are described using logic symbology and terminology. For further information, see Logic Fundamentals in Section 3 of the oscilloscope instruction manual.

NOTE

All references to direction of current in this manual are in terms of conventional current; i.e., from plus to minus.

BLOCK DIAGRAM

The following discussion is provided to aid in understanding the overall concept of the 7D14 before the individual circuits are discussed in detail. A basic block diagram of the 7D14 is shown in Fig. 3-1. A more detailed block diagram is given in the Diagrams section. Only the basic interconnections between the individual blocks are shown on the block diagram. Each block represents a major circuit within the instrument. The number on each block refers to the schematic on which the complete circuit is found.

Signals to be counted are applied to the Channel A Signal Conditioning circuit via either the CH A INPUT connector or the oscilloscope trigger pickoff circuitry. The Channel A Signal Conditioning circuit selects and conditions the input signal to generate a uniform trigger output (Clock). The Clock output is switched on and off by the GATE signal from the Time Base and Control circuit to drive the First Decade Counter. Also, an output from the Trigger Generator (prior to the gated stage) is provided to the oscilloscope vertical system to be displayed on the CRT.

The First Decade Counter circuit is the 10^0 decade or units counter of the 7D14. This circuit counts the Channel A Signal Conditioning circuit Clock output, and provides a units-count, binary-coded-decimal (BCD) output to the Counter and Readout Encoding circuit. At the tenth Clock input, the First Decade Counter circuit provides a $\overline{\text{CARRY}}$ output to the Counter and Readout Encoding circuit.

The Counter circuit counts the $\overline{\text{CARRY}}$ output from the First Decade Counter, and translates the count to a BCD form. This BCD data, along with the BCD output from the First Decade Counter, is stored in the Storage Registers. Upon command of the Time Base and Control circuit $\overline{\text{DISPLAY}}$ output, the stored BCD data is transferred to the Readout Encoding circuit.

The Readout Encoding circuit sequences the BCD data to encode data so the oscilloscope readout system can display a digital readout of the count. The sequencing is determined by the time-slot inputs from the oscilloscope readout system to ensure proper placement of each digit in the

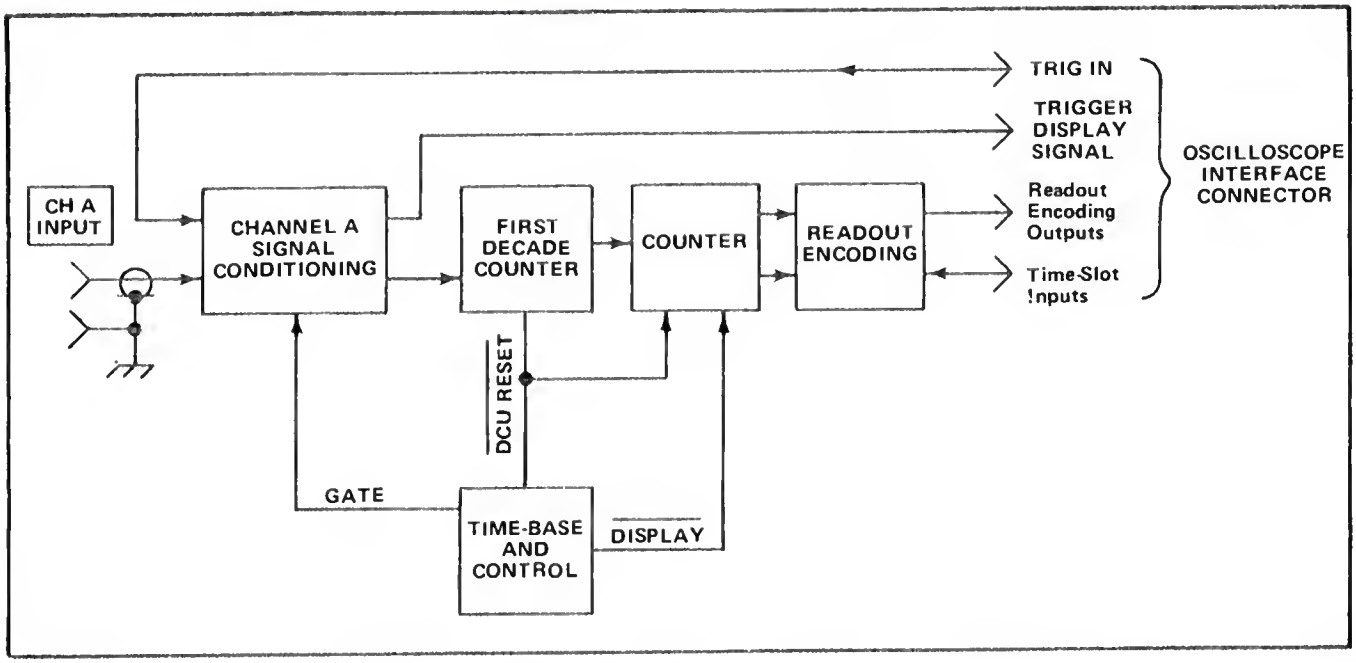

Fig. 3-1. 7D14 basic block diagram.

readout display. This circuit also encodes the readout system to display appropriate measurement units, decimal position, and over-range indication.

The Time Base and Control circuit provides logic level outputs to the other 7D14 circuits to determine when the counter is allowed to count, when the readout display is updated, and when the counter is reset. These output signals are described under Control Signals in this section.

Control Signals

The 7D14 counts pulses and encodes the oscilloscope readout system to display the resultant count. The total count is equal to the pulse rate multiplied by the time the counter is allowed to count.

The signals which determine when the counter is allowed to count, when the readout display is updated, and when the counter is reset are generated in the Time Base and Control circuit. The generation and the time-relationship between these signals are determined by the settings of the MEASUREMENT INTERVAL, DISPLAY TIME, REF FREQ/CH B, and Manual Gate Storage controls. These control settings, in conjunction with external signals (when used), determine the 7D14 measurement mode. The function of the 7D14 controls and connectors is described in Section 2. A complete description of the Time Base and Control circuit is given later in this section. The following brief description of these control signals is provided to aid in understanding the signals as they are used in the other circuits.

The Time Base and Control circuit outputs are the GATE, $\overline{\text{DISPLAY}}$, and $\overline{\text{DCU RESET}}$. These output logic levels are represented in Fig. 3-2. Fig. 3-2 also shows the time-relationship that exists between the outputs in the usual operating modes.

GATE. The GATE output indicates when the counter is allowed to count. When this output level is HI (T_1 to T_2), the GATE is "on"; and the counter counts the input signal. The front-panel GATE indicator lamp is on during the GATE "on" time. The GATE "on" time is determined by the MEASUREMENT INTERVAL switch setting (see Section 2).

$\overline{\text{DISPLAY}}$. This output indicates when the readout display is to be updated. When this output level is LO, the measurement made by the counter is transferred to the readout display. For most operating modes, $\overline{\text{DISPLAY}}$ is generated at the end of the GATE "on" time (T_2).

$\overline{\text{DCU RESET}}$. This output indicates when the counter is to be reset to zero. When this output level is LO, the counter is reset to zero. $\overline{\text{DCU RESET}}$ is generated at T_4, at a time after T_2 as determined by the DISPLAY TIME control.

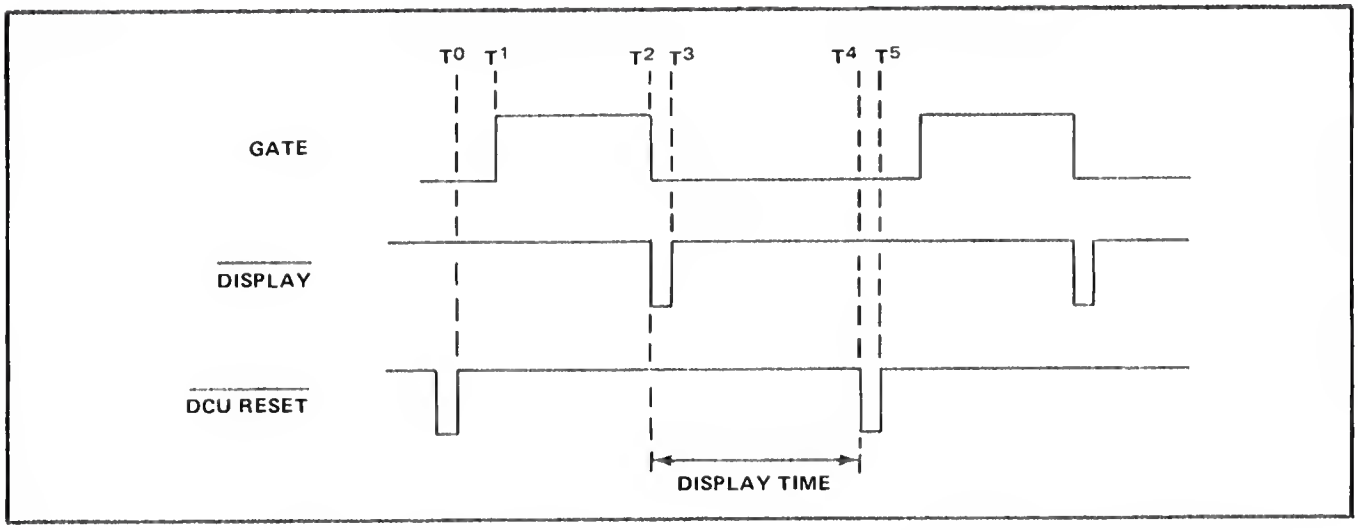

Fig. 3-2. Time Base and Control circuit control signal outputs.

DETAILED CIRCUIT DESCRIPTION
CHANNEL A SIGNAL CONDITIONING

General

A detailed block diagram of the Channel A Signal Conditioning circuit is shown in Fig. 3-3. The phase relationship between the input signal and the Clock output can be selected by the SLOPE control to be in phase or out of phase with one another. When the SLOPE control is set in the positive-slope region, the input signal is in phase with the Clock output signal. A schematic of this circuit is shown on Diagram 1 in the Diagrams section.

Direct coupling is used between stages throughout the Channel A Signal Conditioning circuit (except the Trigger Source Amplifier). Feedback from the output of the Trigger Generator to the minus (–) input of the Input Amplifier through the Feedback Amplifier stabilizes the DC levels of the stages within the feedback loop. Thus, drift due to temperature offsets and/or bandwidth switching is minimized. An internal Zero adjustment sets the voltage level at the plus input of the Input Amplifier to adjust the quiescent DC levels of all stages within the feedback loop. The triggering LEVEL control sets the current into the summing point at the minus input of the Input Amplifier to provide a front-panel adjustment of the Trigger Amplifier output DC level.

COUPLING Switch

Signals applied to the CH A INPUT connector can be AC-coupled or DC-coupled to the Input Amplifier. The input coupling relay, K100, is actuated by COUPLING switch S5. When the AC button is pressed, K100 is actuated to pass the signal through C1 to the Input Sensitivity relays. When the DC button is pressed, K100 is not actuated. The signal is connected directly from the CH A INPUT connector to the Input Sensitivity relays.

INPUT SENS Switch

Signals to be counted are applied to the minus input of the Input Amplifier through the CH A INPUT connector, Input Coupling Relay, and the Input Sensitivity relays; or, to the plus input through the Interface Connector (oscilloscope trigger pickoff signal) and the Trigger Source Amplifier stage. INPUT SENS switch S10 selects the signal input and sets the attenuation ratio/input impedance for signals connected to the CH A INPUT connector.

Switching of the CH A INPUT signal is accomplished by means of relays, K101-K103-K106, actuated by S10. When S10 is set to TRIG SOURCE, +15 volts is applied to the Trigger Source Amplifier to turn it on. At the same time, the switching relays disconnect the CH A INPUT signal from the Input Amplifier.

When S10 is set to the 100 mV sensitivity setting (50 Ω or 1 MΩ), relays K101 and K103 connect the CH A INPUT signal from the Input Coupling Relay to the Input Amplifier. Resistor R112 establishes a one-megohm input impedance in the 1 MΩ position of the INPUT SENS switch. A network consisting of R107-R108-LR108-R109-R110 is switched in by relay K106 in the 50 Ω positions to provide a 50-ohm input impedance.

R101-R102-R103-R104-R105 form a 10X-100X attenuator network. C101-C102-C103-C105 compensate this attenuator network for high-frequency signals. For S10

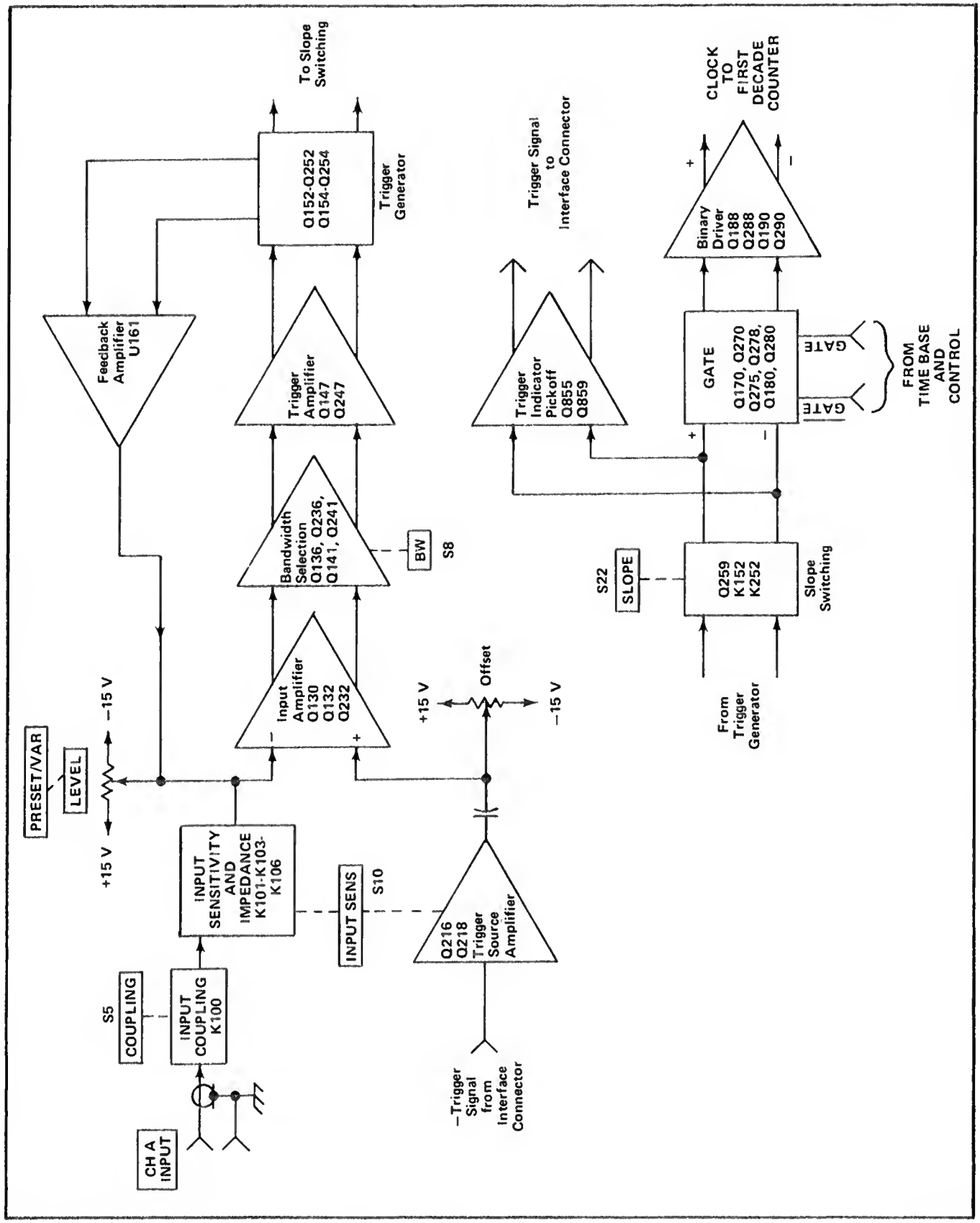

Fig. 3-3. Channel A Signal Conditioning circuit detailed block diagram.

settings of 1 V, the signal is applied to the junction of R103 and R104 through relay K103S1; the output is taken from the junction of R104-R105 through relay K103S2. For the S10 setting of 10 V (1 MΩ only), the signal is applied to the junction of R101-R102 through relay K101S1; the output is taken from the junction of R104-R105 through relay K103S2. R101 re-establishes the 1 MΩ input impedance when S10 is set to the 10 V position.

Trigger Source Amplifier

The Trigger Source Amplifier amplifies oscilloscope trigger pickoff signals from the Interface Connector in the TRIG SOURCE position of the INPUT SENS switch, and applies the signal to the Input Amplifier through C222-C223. Since the output of the Trigger Source Amplifier is applied to the plus input of the Input Amplifier, the trigger pickoff – Trig In signal is amplified by this stage. This maintains the same phase relationship to the Clock output as a signal applied to the CH A INPUT connector.

Resistor R212 establishes the input resistance for this stage. Also, R212, in conjunction with R871, provides a load for the oscilloscope trigger pickoff circuitry. The input signal is coupled through C212-R214 to the base of Q216. C212 blocks the DC component of the trigger pickoff signal; otherwise, the DC level of the signal will be affected by the vertical unit position control(s).

Input Amplifier

The Input Amplifier stage consists of Q130A-B, Q132, and Q232. This stage is a wide-bandwidth operational amplifier that converts the single-ended input signal to a differential (push-pull) signal to drive the Bandwidth Selection stage. The minus input of the operational amplifier is the gate of Q130A, and the plus input is the gate of Q130B.

The minus input is the summing point for input signals (from the CH A INPUT connector), the triggering LEVEL (or Preset) control current, and negative-feedback signals. CR114-CR115-CR116-CR117 form a diode clamp network to protect the input components from damage due to excessive input voltages. These diodes will conduct only if the voltage at the summing point exceeds about ±1.2 volts.

Negative feedback from the output of the Input Amplifier through C132-R113, and through L134-C119-R119-R117-R113 to the minus input compensates the high-frequency response of this stage. C132 provides high-frequency compensation.

The sum of the currents into the minus input summing point sets the Trigger Amplifier output DC level as determined by PRESET-VAR switch S20. When the PRESET button is in, the voltage level at the junction of R121-R126-R127-R128 is determined by R125, Preset. R125 adjusts the current into the summing point through R128-R117-R113 to balance the Trigger Amplifier outputs for a zero-volt difference. When the VAR button is in, the voltage set by R22 (LEVEL) is connected to the junction of R121-R126-R127-R128 through R121 to provide front-panel adjustment of the triggering point.

Bandwidth Selection

The Bandwidth Selection stage consists of five-megahertz (MHz) amplifier Q136-Q236, 525-MHz amplifier Q141-Q241, and associated components. The BW switch, S8, selects the bandwidth by providing an emitter ground return for one of the two bandpass amplifiers. Diode clamps, CR135-CR136 and CR235-CR236, protect the transistors from damage due to excessive input voltage.

The bandwidth of transistor-pair Q136-Q236 is limited to about five MHz by inductors L134-L135-L138 and L234-L235-L238. When the BW switch 5 MHz button is in, emitter resistors R135 and R235 are returned to ground through R138 to enable Q136-Q236. When the 500 MHz button is in, the ground return for Q136-Q236 is disconnected; +15 volts through R137 to R135-R235 ensures cutoff of Q136-Q236.

The bandwidth of transistor-pair Q141-Q241 exceeds 525 MHz. When the 500 MHz button is in, emitter resistors R140-R240 are returned to ground through R238 to enable Q141-Q241. When the 5 MHz button is in, this ground return is disconnected; +15 volts through R237 to R140-R240 ensures cutoff of Q141-Q241.

Trigger Amplifier

The Trigger Amplifier stage consists of emitter coupled pair Q147-Q247, and associated components. This stage provides amplification for the differential signal from the Bandwidth Selection stage to drive the Trigger Generator.

Trigger Generator

The Trigger Generator consists of Q152, Q252, Q154, Q254, and associated components. This stage shapes the output signal from the Trigger Amplifier to provide a trigger pulse with a fast leading edge to the Slope Switching stage.

Q152 and Q252 are emitter-coupled current switches. Emitter-followers Q154 and Q254 feed the output signals back to the opposite inputs. The differential signal at the collectors of Q154 and Q254 is applied to the Feedback Amplifier stage.

Feedback Amplifier

The Feedback Amplifier converts the Trigger Generator differential output to a single-ended signal to provide negative feedback to the Input Amplifier. This stage consists of an integrated-circuit (IC) operational amplifier U161. Feedback from the output of U161 at pin 6 is connected to the minus input through R161.

Slope Switching

The Slope Switching stage connects the Trigger Generator differential output to the Gate and Trigger Indicator Pickoff inputs. Slope switching is accomplished by means of relays K152-K252 (in conjunction with Q259), as determined by the PRESET-VAR and SLOPE switches.

When the PRESET button is in, positive (+) slope triggering is selected, regardless of the LEVEL SLOPE control setting. This sets the relays to connect the Trigger Generator + and − outputs to the Gate + and − inputs respectively (i.e., in phase).

When the VAR button is in, the trigger slope is determined by the SLOPE switch setting. In that SLOPE switch position, the circuit operation is the same as described for PRESET. When the SLOPE switch is set to −, +15 volts applied to K252 and to the base of Q259 reverses the state of the relays; this reverses the phase of the signal connection to the Gate.

Trigger Indicator Pickoff

The Trigger Indicator Pickoff stage consists of Q855 and Q859. This stage provides an analog signal output to the oscilloscope through the Interface Connector to display the Trigger Generator output on the CRT. A Trig Out signal is also provided to trigger a time-base unit. R866, Display Positioning, adjusts the output voltage levels to set the vertical position of the CRT display.

Gate

The Gate stage consists of input emitter-coupled pair Q170-Q270, output emitter-coupled pair Q180-Q280, signal switches Q275-Q278, and tunnel-diode CR174. This stage connects the differential signal at its inputs to the Binary Driver stage on command of the complementary GATE and $\overline{\text{GATE}}$ inputs.

The + and − inputs to this stage are the bases of Q170 and Q270 respectively. Reference zener diode VR178 establishes a low-impedance, −7.5-volt reference level at the base of Q180. Decoupling for the −7.5-volt reference level is provided by C178. Reference zener diode VR176 establishes a low-impedance, −2.5-volt reference level at the cathode of tunnel-diode CR174. Decoupling is provided by C176.

Signal switching is accomplished by connecting the signal at the collector of Q270 through either Q278 or Q275 as determined by the state of tunnel-diode CR174. Tunnel-diode CR174 must be in its high state for Q275 to be forward biased, and in its low state for Q278 to be forward biased.

Tunnel-diode CR174 is switched into its high state when GATE is HI with respect to $\overline{\text{GATE}}$ (GATE "on") and Q170 is forward biased. When tunnel-diode CR174 is in its high state, Q275 is forward biased to connect the Q270-collector signal to the base of Q280. Q180-Q280 act as a paraphase amplifier to provide a differential-current output to the Binary Driver through T183.

When $\overline{\text{GATE}}$ is HI with respect to GATE (GATE "off"), CR174 is switched back to its low state, regardless of the state of Q170. The low state of CR174 forward biases Q278 and reverse biases Q275. This connects the Q270-collector signal to the low-impedance, −7.5-volt reference-level point to turn off the Gate stage.

Binary Driver

Q190-Q290 amplify the differential-current input from the Gate to the current level necessary to provide a Clock output to the Binary Counter (First Decade Counter circuit). Diode-connected Q288 provides a temperature-compensated voltage level at the bases of Q190-Q290 and Q188. Q188 acts as a constant-current source to supply the emitter current for Q190-Q290.

FIRST DECADE COUNTER

General

A detailed block diagram of the First Decade Counter circuit is shown in Fig. 3-4. An input/output table for the First Decade Counter circuit is shown in Fig. 3-5. A schematic of this circuit is shown on Diagram 2 in the Diagrams section.

The Binary Counter Voltage Regulator provides two temperature-compensated operating voltages to the Binary Counter integrated circuit. These output voltages are derived from the oscilloscope −15-Volt power supply.

The Binary Counter stage counts the Clock input, and provides a binary-coded output. The Binary Counter output provides the 2^0 bit of the BCD output to the 10^0 Storage

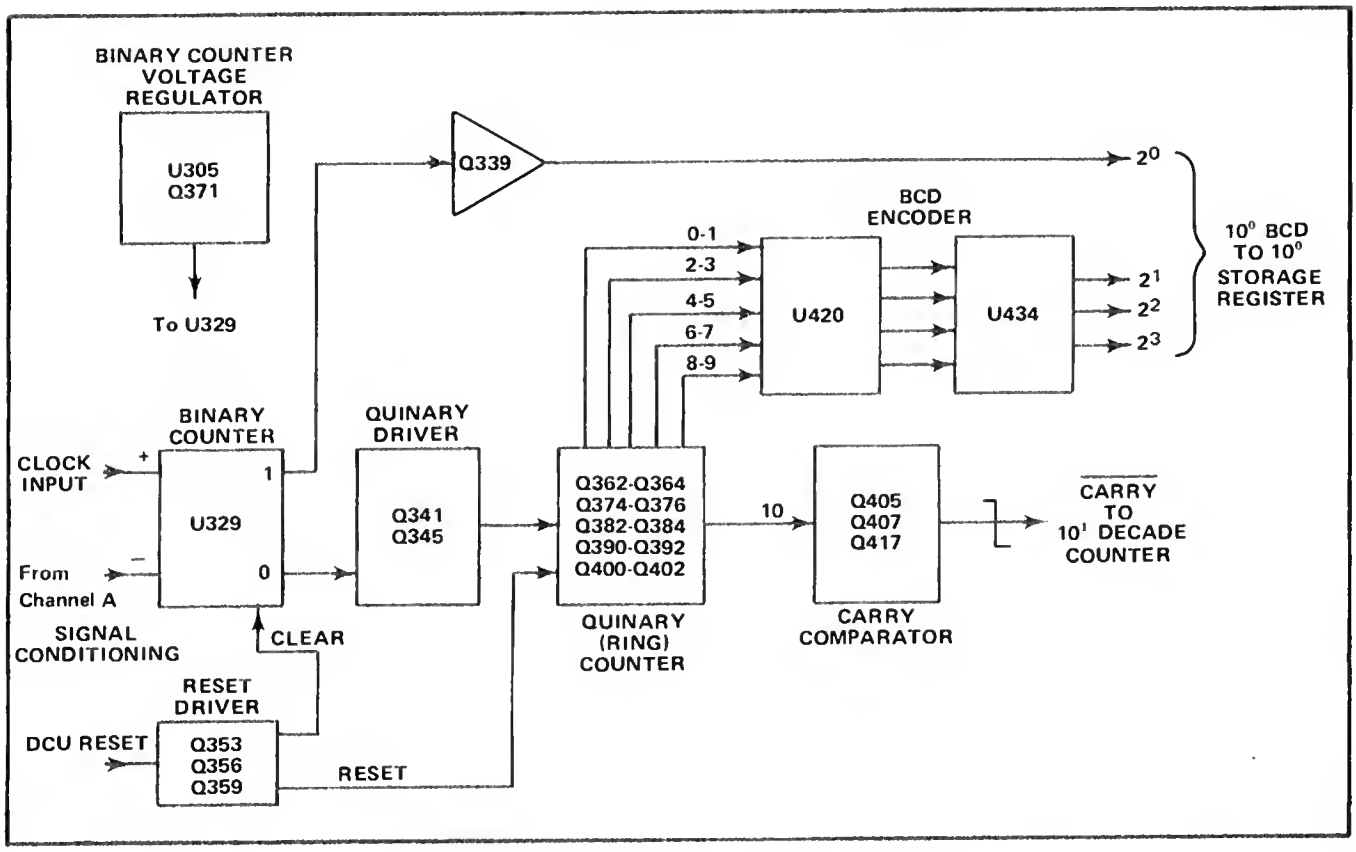

Fig. 3-4. First Decade Counter circuit detailed block diagram.

Input Clock Count	OUTPUTS Binary-Coded-Decimal 2^0	2^1	2^2	2^3	$\overline{\text{CARRY}}$
0	LO	LO	LO	LO	LO
1	HI	LO	LO	LO	LO
2	LO	HI	LO	LO	LO
3	HI	HI	LO	LO	LO
4	LO	LO	HI	LO	LO
5	HI	LO	HI	LO	HI
6	LO	HI	HI	LO	HI
7	HI	HI	HI	LO	HI
8	LO	LO	LO	HI	HI
9	HI	LO	LO	HI	HI
10	LO	LO	LO	LO	LO

Fig. 3-5. Input/output table for First Decade Counter circuit.

Register (Counter and Readout Encoding circuit) through Q339. Also, the Binary Counter output drives the Quinary Counter through the Quinary Driver stage.

The Quinary Driver shapes the Binary Counter output to provide a more constant-amplitude output to drive the Quinary Counter. The Quinary Counter (divide-by-five counter) counts the Binary Count, and provides a HI level on one of five output lines to the BCD Encoder. The HI level output line indicates a Quinary Count of 0-1, 2-3, 4-5, 6-7, or 8-9. The BCD Encoder translates the Quinary Counter output to encode the 2^1, 2^2, and 2^3 bits of the BCD output.

The Carry Comparator detects the tenth Clock input to the First Decade Counter circuit to provide the $\overline{\text{CARRY}}$ output (a HI to LO level transition; see Fig. 3-5).

The Reset Driver provides the HI level RESET and CLEAR outputs on command of the DCU RESET input from the Time Base and Control circuit. These outputs reset the Binary and Quinary Counter stages to the zero-count state.

Binary Counter Voltage Regulator

Negative 15 volts from the oscilloscope power supply is applied to series Regulator Q317 to provide a −8.5-volt output. U305A and U305B (U305 is a five-transistor array IC) are connected as a comparator. Reference voltage for the comparator is provided by voltage divider R300-R301-R302, which sets the base of U305B at about −8.5 volts. The comparator output sets the base level of Series Regulator Q317 through emitter-followers U305D-U305E.

A voltage divider consisting of R327 and U305C provides the Reference Voltage output from −8.5-volt supply. R320, Ref Voltage, adjusts the base level of U305C to set the Reference Voltage output to about −3.5 volts.

Binary Counter

The Binary Counter consists of IC U329 and transistor Q339. The + and − Clock inputs toggle U329 to provide a Binary Count output with a repetition rate one-half that of the Clock input. The U329-0 output drives the Quinary Counter through the Quinary Driver stage. Q339 isolates the U329-1 output from the BCD-output 2^0 bit.

The Reset Driver CLEAR output is applied to U329 pin 1 through CR357. When the CLEAR level is HI, U329 is cleared for a LO 1 output.

Reset Driver

The Reset Driver stage provides the RESET and CLEAR outputs to the Binary Counter and Quinary Counter stages respectively upon command of the Time Base and Control circuit $\overline{\text{DCU RESET}}$ output.

The quiescently HI level $\overline{\text{DCU RESET}}$ input is applied to the emitter of Q535 through CR351-R351. When the $\overline{\text{DCU RESET}}$ input goes LO, the HI to LO level transition momentarily forward biases Q353. This produces a negative-going pulse on the collector of Q353. The negative-going pulse is applied directly to the base of Q356, and from the emitter of Q356 to the base of Q359 through C358-R359. As this results in a forward-bias condition for Q356 and reverse bias for Q359, the collectors of both transistors momentarily go HI to provide RESET and CLEAR outputs.

Quinary Driver

Q341-Q345 are connected as an emitter-coupled Schmitt multivibrator. The 0-output of Binary Counter U329 is connected to the base of Q341 through zener diode VR331 to trigger the multivibrator. The output is taken from the collector of Q345. When the Binary Counter-0 output is HI, Q341 conducts and Q345 is turned off. Therefore, the Quinary Driver Binary Count output is in phase with the U329-0 output.

Quinary Counter

The Quinary Counter is made up of five Schmitt multivibrators, connected together to form a ring counter. Each multivibrator (multi) receives the Binary Count input. However, the ring counter configuration is such that an input will change the state of only one multi. In turn, this conditions the succeeding multi to respond to the next input, etc. A resistor network between the multi outputs compares the state of each multi to the state of both the preceding and succeeding multis to provide the output to the BCD Encoder.

A simplified diagram of the Quinary Counter is shown in Fig. 3-6(A). Each multi is made up of two transistors. The multis are identified in Fig. 3-6(A) as multi A, Q362-Q364; B, Q374-Q376; C, Q382-Q384; D, Q390-Q392; and E, Q400-Q402. The output load resistor is shown above the left transistor of each multi. The left transistor in each multi receives the Binary Count input.

In each multi, the emitter-resistor current (e.g., I_a) will flow through the transistor which has the more positive base level. The current through a multi load resistor is determined by the state of the corresponding multi and the preceding one. Therefore, the load resistor current can be at one of three levels; and, this will result in one of three voltage levels dropped across the load resistor. For example, the voltage dropped across load resistor B may be due to one current unit (I_a or I_b), two current units ($I_a + I_b$), or zero. The voltage levels resulting from zero, one, and two current units through a load resistor are represented in Fig. 3-6(B); and, are labelled +, 0, and − respectively.

The RESET input resets the Quinary Counter to the zero-count state. The momentary HI RESET level is applied to the base of the left transistor in each multi through R361-R348, and to the right transistor in multis A and C through R365 and R385 respectively. This causes the left transistor in multis B, D, and E to have the more positive base and the right transistor in multis A and C to have the more positive base. As a result, emitter-resistor current flows through the right transistor in multis A-C, and through the left transistor in multis B-D-E.

The reset, or zero-count, state of each multi is shown in Fig. 3-6(A) by the direction of the arrow representing emitter-resistor current. The resultant voltage dropped across each load resistor is A, +; B, −; C, +; D, −; and E, 0. The multi output voltage is applied to the base of the right transistor through a zener diode. The zener diode lowers the base voltage level; however, the relative voltage level between the right transistor bases remains the same.

Fig. 3-7(A) shows the Quinary Driver Binary Count output in relation to the Clock input to the Binary Counter. At the first Clock input, the Binary Count output goes LO. This pulls the base of each left transistor LO towards a reverse-bias condition. Since the left transistors in multis A and C are already non-conducting, the LO input has no effect. Due to the voltage across the load resistors (− level), the bases of the right transistors of multis B and D are

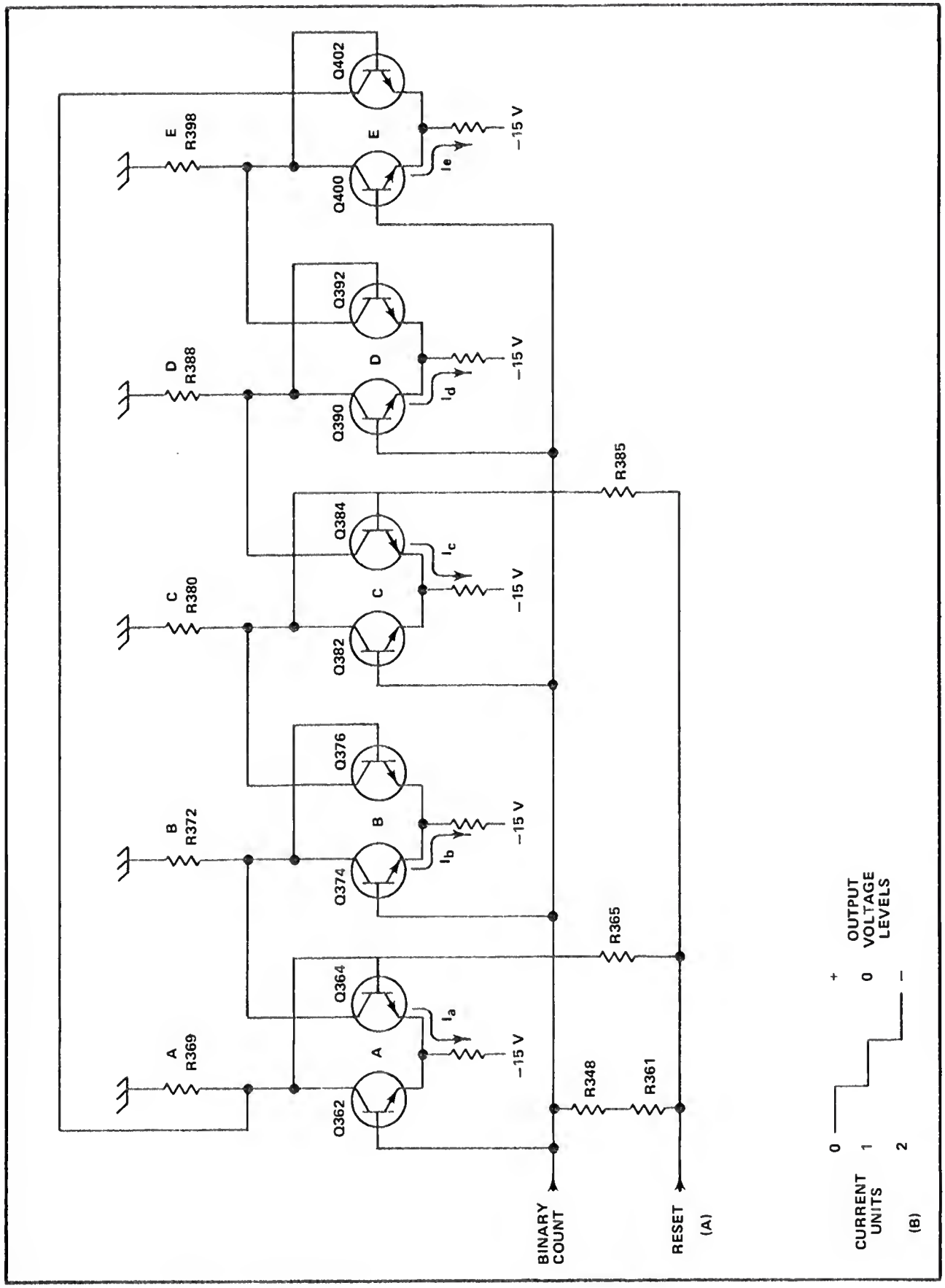

Fig. 3-6. (A) Quinary Counter simplified schematic diagram. (B) Multivibrator current units/output voltage levels chart.

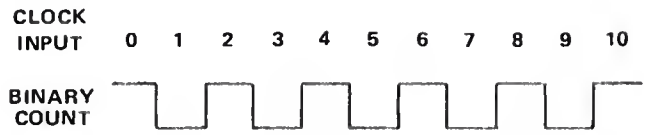

(A)

	CLOCK COUNT	OUTPUT LEVEL A	B	C	D	E
RESET	0 or 10	+	–	+	–	0
	1	0	–	+	–	+
	2	–	0	+	–	+
	3	–	+	0	–	+
	4	–	+	–	0	+
	5	–	+	–	+	0
	6	0	+	–	+	–
	7	+	0	–	+	–
	8	+	–	0	+	–
	9	+	–	+	0	–

(B)

Fig. 3-7. (A) Clock count input vs. Quinary Driver Binary Count output. (B) Quinary Counter output voltage levels after each clock count.

sufficiently negative that the left transistors continue to conduct. The voltage on the base of the right transistor in multi E is at the 0 level, and the LO Binary Count input causes multi E to change state.

The change of state of multi E changes the voltage across load resistors A and E. The output voltage levels are now A, 0; B, –; C, +; D, –; and E, +. At the next Clock input (2), the Binary Count input goes HI. This tends to forward bias the left transistor in each multi, but causes only multi A to change state. The left transistors of multis B and D are already forward biased, and the right transistors of multis C and E are sufficiently forward biased to remain conducting.

This sequence of operation continues for the remainder of the Binary Count. The output voltage levels after each Clock input are shown in Fig. 3-7(B). The multi which has the 0-level output changes state at the next Clock input, and conditions the next multi.

Resistor networks connected between the multivibrator outputs compare the output voltage levels of the multis to provide a HI level on one of five output lines. The output line with the HI level indicates the quinary count to the BCD Encoder. The resistor network consists of five pairs of resistors. Each pair of resistors compares the state of two adjacent multivibrators; R370-R399 compares A and E, R367-R371 compares A and B, R373-R379 compares B and C, R381-R387 compares C and D, and R389-R396 compares D and E. The outputs to the BCD Encoder are taken from the junction of each resistor pair. The level of an output line is HI only when the associated multivibrator output levels are + and 0 (or 0 and +); other combinations result in zero or a LO output.

BCD Encoder

BCD Encoder U420-U434 translates the Quinary Counter outputs to encode the 2^1, 2^2, and 2^3 bits of the BCD output (the 2^0 bit is encoded directly from the Binary Counter output).

The five Quinary Counter output lines are connected to the bases of five-transistor IC array U420. The transistor in this array which has the most positive base will conduct. When the base of U420 B, C, D, or E is HI, the corresponding collector goes LO to provide an output to U434. The collector of U420A is grounded. Thus, when the base of U420A is HI (0-1 count), U420 conducts, but no output is provided. Three inverted-input OR gates within U434 provide the 2^1, 2^2, and 2^3 bits of the BCD output from the U420 outputs. An input/output table for U420-U434 is given in Fig. 3-8.

Carry Comparator

The Carry Comparator provides the $\overline{\text{CARRY}}$ output to the second decade counter (10^1) in the Counter and Readout Encoding circuit. The $\overline{\text{CARRY}}$ output is a HI to LO level transition to indicate the tenth Clock input counted by the First Decade Counter circuit (see Fig. 3-5, Input/output table for the First Decade Counter circuit).

Emitter-coupled pair Q405-Q407 compares the voltage levels at the bases of Q392 and Q402 to compare the output levels of multivibrators D and E. The transistor with the more positive base controls the conduction of Q405 or Q407. For Clock inputs five through nine, the more positive output level of multivibrator D will cause Q407 to conduct and Q405 to be cut off. As a result, the level at the collector of Q405 is HI. At the tenth Clock input, the output level of multivibrator E becomes more positive to turn on Q405. The collector of Q405 goes LO. The HI to LO level transition at the collector of Q405 is applied to emitter-follower Q418 to provide the $\overline{\text{CARRY}}$ output.

Input	Outputs						
HI Level	U420				U434		
Quinary Counter Output Line	B Pin 5	C Pin 8	D Pin 11	E Pin 14	2^1 Pin 6	2^2 Pin 3	2^3 Pin 8
0-1	HI	HI	HI	HI	LO	LO	LO
2-3	HI	LO	HI	HI	HI	LO	LO
4-5	HI	HI	HI	LO	LO	HI	LO
6-7	LO	HI	HI	HI	HI	HI	LO
8-9	HI	HI	LO	HI	LO	LO	HI

Fig. 3-8. BCD Encoder stage input/output table.

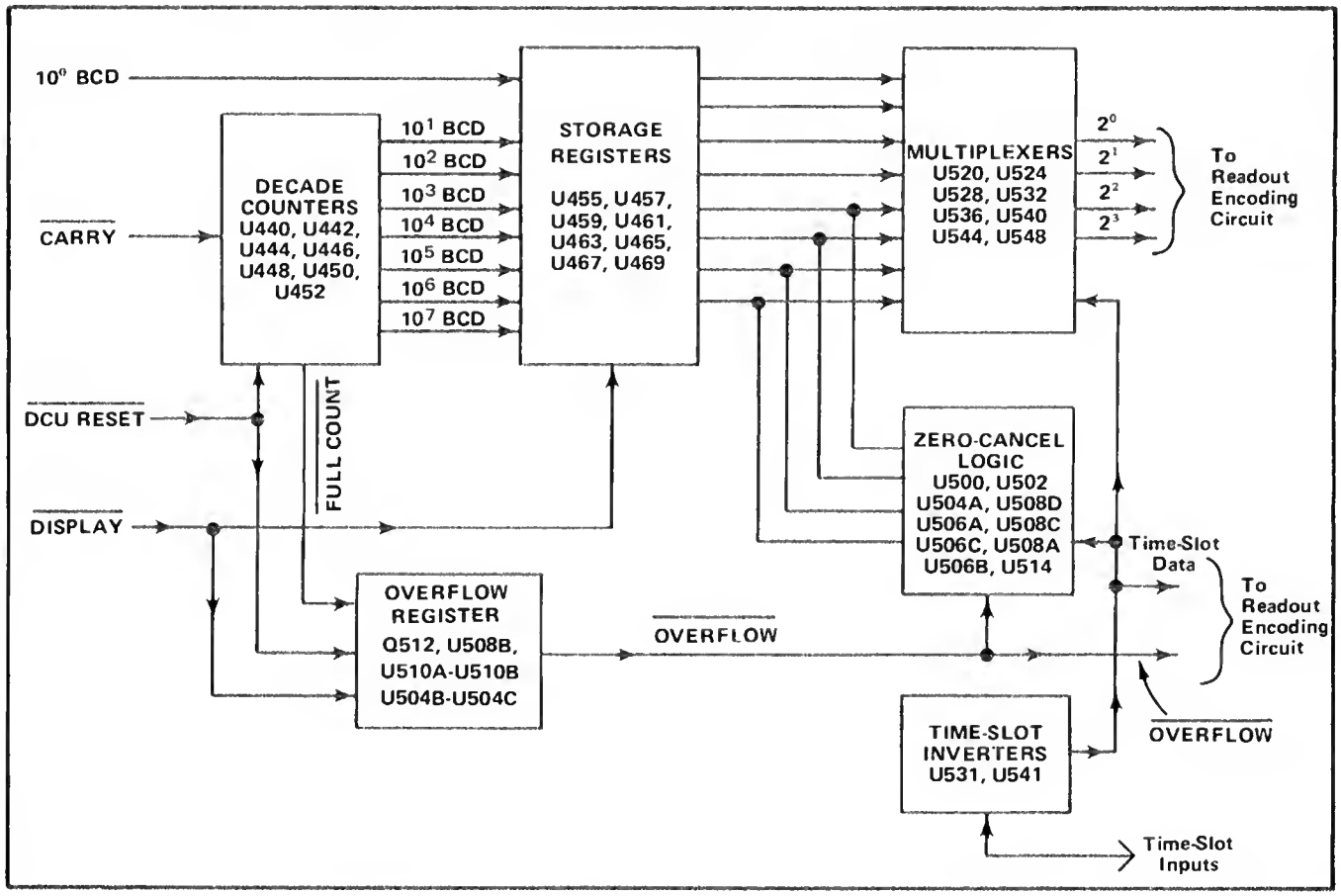

Fig. 3-9. Counter circuit detailed block diagram.

COUNTER CIRCUIT

General

The Counter circuit consists of the Decade Counters, Storage Registers, Multiplexers, Overflow Register, Zero-Cancel Logic, and the Time Slot Inverter stages. A detailed block diagram of the Counter circuit is shown in Fig. 3-9. A schematic of this circuit is shown on Diagram 3 in the Diagrams section.

The Decade Counters count the $\overline{\text{CARRY}}$ output from the First Decade Counter circuit, and translate this count to a binary-coded-decimal (BCD) form. This BCD data, along with the First Decade Counter BCD output, is stored in the Storage Registers. Upon command of the $\overline{\text{DISPLAY}}$ input, the stored BCD data is transferred to the Multiplexers. When the Decade Counters have counted to 99999999, the counters are full. At the next count, the Decade Counters provide a HI to LO level transition $\overline{\text{FULL COUNT}}$ output to the Overflow Register.

The Overflow Register stores the $\overline{\text{FULL COUNT}}$ input, and provides the $\overline{\text{OVERFLOW}}$ output on command of the $\overline{\text{DISPLAY}}$ input. $\overline{\text{DCU RESET}}$ is applied to the Counter circuit to reset the Decade Counters to the zero-count state and to reset the $\overline{\text{OVERFLOW}}$ output HI.

The time-slot pulses from the oscilloscope readout system are connected to the Counter circuit and to the Readout Encoding circuit through the Interface Connector. The time-slot pulses are inverted by the Time-Slot Inverters to provide time-slot data to the Multiplexers, Zero-Cancel Logic, and to the Readout Encoding circuit.

The BCD outputs of the Storage Registers are applied to the Multiplexers and Zero-Cancel Logic stages. The Multiplexers stage sequences the BCD inputs to provide the Readout Encoding circuit with only four specific BCD bits at any one time. The sequencing is determined by the outputs of the Time-Slot Inverters to ensure proper placement of each digit in the readout display. The Zero-Cancel Logic stage provides zero-cancel logic outputs to the Readout Encoding circuit as determined by inputs from the Storage Registers, Overflow Register, and Time-Slot Inverter stages.

Decade Counters

The 10^1 through 10^7 Decade Counters are seven cascaded divide-by-ten IC counters. Each decade translates the

decimal input to a BCD output for the corresponding Storage Register. The operation of each decade is similar. The counting operation is performed on a HI to LO transition at the T (trigger) input, pin 8. The DCU RESET input is connected to the direct-reset input (pin 13) of each counter. When the DCU RESET input goes LO, the Decade Counters are reset to the zero-count state. An input/output table applicable to each decade is given in Fig. 3-10.

The HI to LO transition of the CARRY input triggers the 10^1 Decade Counter U440. At the tenth CARRY input, pin 12 of U440 goes from HI to LO to provide a trigger to the 10^2 Decade Counter U442. The operation of the remainder of the decades is similar. The tenth input to the 10^7 Decade Counter U452 triggers the counter from the nine-count to the zero-count. The 2^3 output (pin 12) level goes from HI to LO to provide the FULL COUNT output to the Overflow Register (see Fig. 3-10).

	INPUT TRIGGER Pin 8	OUTPUTS BCD			
		2^0 Pin 5	2^1 Pin 9	2^2 Pin 2	2^3 Pin 12
Reset	0	LO	LO	LO	LO
	1	HI	LO	LO	LO
	2	LO	HI	LO	LO
	3	HI	HI	LO	LO
	4	LO	LO	HI	LO
	5	HI	LO	HI	LO
	6	LO	HI	HI	LO
	7	HI	HI	HI	LO
	8	LO	LO	LO	HI
	9	HI	LO	LO	HI

Fig. 3-10. Decade Counter input/output table.

Storage Registers

The eight IC Storage Registers store the corresponding decade counter BCD output. The BCD input is applied to the D (data) inputs at pins 4, 10, 3, and 11 (2^0-2^1-2^2-2^3 bits respectively). The DISPLAY input is applied to the data-strobe input at pin 1 of each Storage Register IC. When the DISPLAY input goes LO, the logic levels at the D inputs are transferred to the associated BCD bit output to provide a BCD output to the Readout Encoding circuit.

Overflow Register

U508B is connected as an inverter. U508B inverts the HI to LO FULL COUNT input to provide a positive-going output to the T input of U510A. U510A is an edge-triggered, D-type flip-flop with a direct-clear input. When U510A is triggered, the HI at the D-input is transferred to the 1-output. A LO applied to the direct-clear input of U510A clears U510A for a LO output. DCU RESET is applied to the U510A direct-clear input. DISPLAY is applied to the base of Q512 through R511. Q512 inverts its input to provide the DISPLAY output to U504B and U504C.

When the Decade Counters are counting, DCU RESET is HI and DISPLAY is HI (for most modes of operation). When the Decade Counters have reached a count of 99999999, the next count provides a HI to LO FULL COUNT output to the input of U508B. U508B inverts the transition to provide a positive-going trigger to U510A. This triggers U510A to transfer the HI level at the D-input to the 1-output. When DISPLAY goes LO, Q512 provides a HI to U504B and U504C. U504B then provides a LO to the direct-clear input of U510B. This clears U510B for a LO level OVERFLOW output.

When DCU RESET goes LO, U510A is cleared for a LO 1-output. This results in a HI U504B output. This HI applied to pin 9-U504C, and the HI level DISPLAY applied to pins 10 and 11 of U504C, results in a U504C LO output. This LO applied to the direct-set input of U510B at pin 10 sets U510B for a HI output.

Multiplexers

The Multiplexers consist of eight IC's; U520, U524, U528, U532, U536, U540, U544, and U548. Each multiplexer IC is addressed by a particular time-slot input to provide the BCD data to encode the corresponding readout display digit. Each IC contains four two-input NAND gates. The inverted time-slot input is connected to one input of each NAND gate. A BCD bit input is applied to the remaining NAND gate input. The NAND gate outputs are connected to common 2^0-2^1-2^2-2^3 output lines to the Readout Encoding circuit.

The Multiplexers invert the BCD outputs of the Storage Registers to drive the LO-true inputs of the Readout Encoding circuit. +5 volts is applied to each output line through resistor R555, R556, R557, or R558. Quiescently, this holds the output lines HI. When a HI level inverted time-slot pulse addresses a Multiplexer, a HI input level will result in a LO output; a LO input will result in no change or a HI output. For example, the 10^0 Storage Register 2^0-2^1-2^2-2^3 outputs for the decimal-digit three will be HI-HI-LO-LO respectively. These input levels are applied to Multiplexer U520 at pins 6-12-2-8 respectively. When U520 is addressed by inverted time-slot TS-10, the U520 outputs will be 2^0 -LO, 2^1 -LO, 2^2 -HI, 2^3 -HI at pins 4-13-1-10 respectively.

Time-Slot Inverters

The Time-Slot Inverters invert the negative-going time-slot pulses to provide a HI-level pulse output for each input pulse. Each inverter consists of a single-transistor section of five-transistor arrays U531 or U541. Quiescently, each transistor is forward biased to saturation to hold the collector level close to ground. The time-slot pulse is connected to the inverter-transistor base through a zener diode to drop the pulse voltage level about 12 volts. This ensures that the −15-volt time-slot input pulse almost reaches its negative extremity before the associated inverter-transistor is reverse biased. When the inverter transistor is reverse biased, the

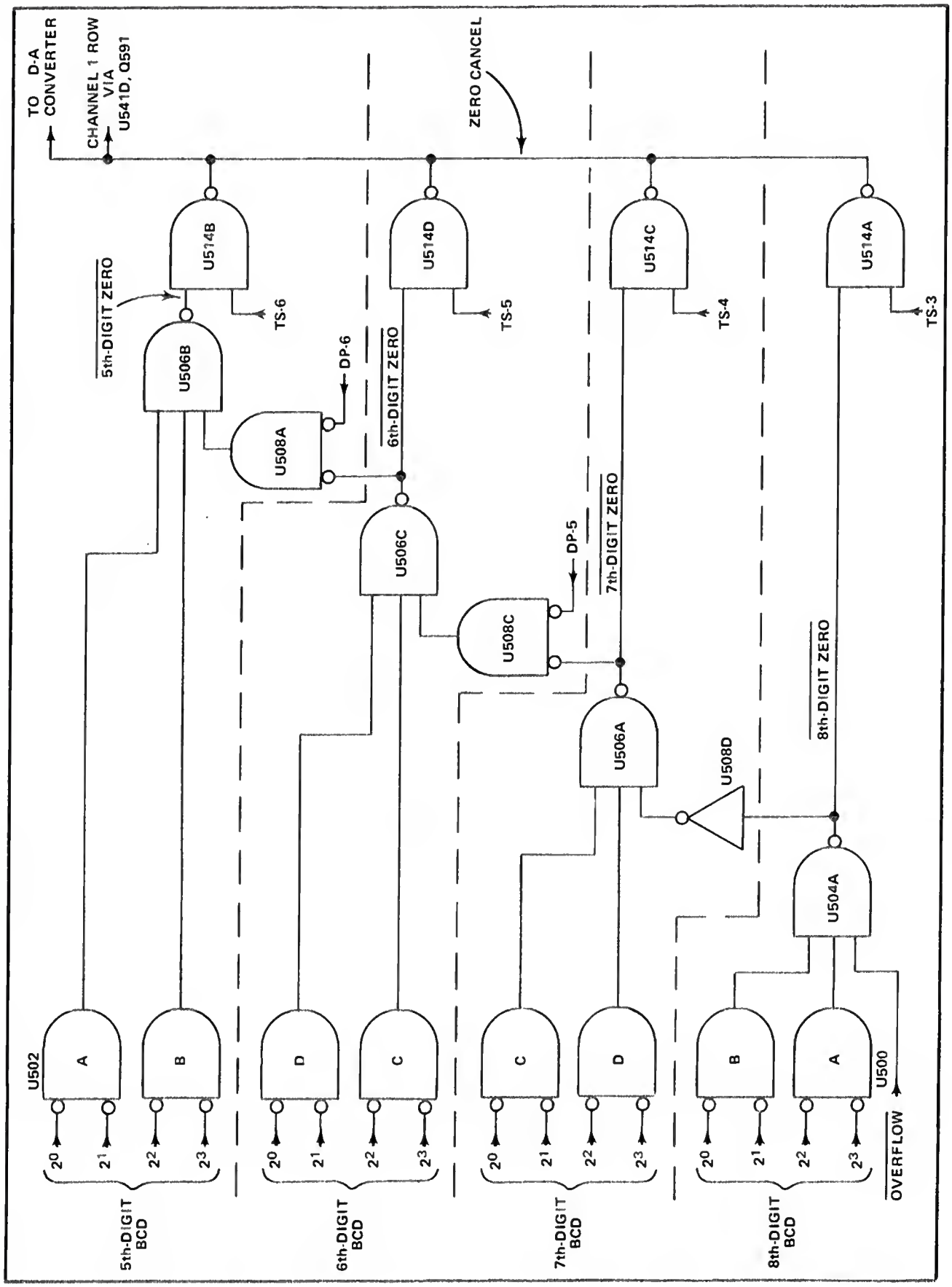

Fig. 3-11. Logic diagram for Zero-Cancel Logic stage.

collector level goes HI to provide a HI-level time-slot output.

Zero-Cancel Logic

The Zero-Cancel Logic stage provides logic level outputs during time-slots TS-3, TS-4, TS-5, and TS-6. A HI level output during any one of these four time-slots encodes the Readout Encoding circuit for a SPACE instruction. A LO level output allows the Readout Encoding circuit to encode the output for the decimal digit called for by the BCD inputs.

A logic diagram of the Zero-Cancel Logic stage is shown in Fig. 3-11. The logic components are grouped according to the display digit which is directly affected by the corresponding Zero-Cancel Logic stage output. An input/output table for each digit-group is shown in Fig. 3-12.

READOUT ENCODING CIRCUIT

General

A discussion entitled Introduction to the Readout System following the 7D14 Circuit Description gives a brief description of the readout system used in Tektronix 7000-Series Oscilloscopes. Refer to this description for more information on operation of the readout system.

Inputs		Outputs
8th-Digit BCD	$\overline{\text{OVERFLOW}}$	8th-Digit Zero-Cancel
Φ	LO	LO
1-9	Φ	LO
Zero	HI	HI
7th-Digit BCD	8th-Digit Zero	7th-Digit Zero-Cancel
Φ	HI	LO
Zero	LO	HI
1-9	Φ	LO

Inputs			Outputs
6th-Digit BCD	7th-Digit Zero	DP-5	6th-Digit Zero-Cancel
Φ	HI	Φ	LO
1-9	Φ	Φ	LO
Zero	LO	HI LO	LO HI
5th-Digit BCD	6th-Digit Zero	DP-6	5th-Digit Zero-Cancel
Φ	HI	Φ	LO
1-9	Φ	Φ	LO
Φ	Φ	HI	LO
Zero	LO	LO	HI

ΦHas no effect in this case

Fig. 3-12. Input/output table for Zero-Cancel Logic stage.

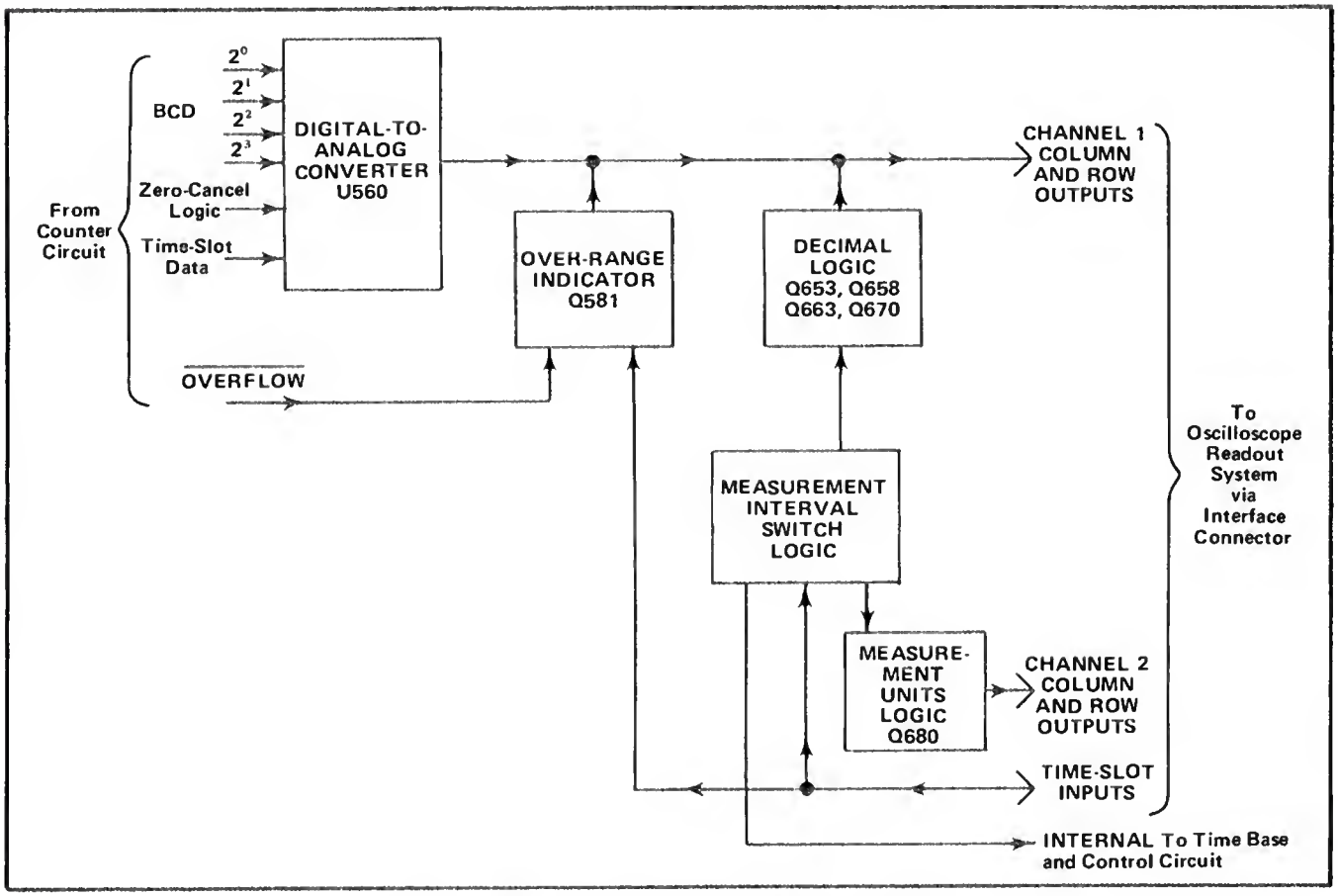

Fig. 3-13. Readout Encoding circuit detailed block diagram.

The 7D14 Readout Encoding circuit consists of the Digital-to-Analog (D-A) Converter, Over-range Indicator, MEASUREMENT INTERVAL Switch Logic, Decimal Logic, and Measurement Units Logic stages. The Readout Encoding circuit encodes the Channel 1 and 2, Row and Column output lines according to the format given in Table 3-1. A detailed block diagram of the Readout Encoding circuit is shown in Fig. 3-13. A schematic of this circuit is given on Diagram 4 in the Diagrams section.

Time-slot sequenced BCD data and zero-cancel logic outputs from the Counter circuit are applied to the D-A Converter stage. The D-A Converter encodes the Channel 1 outputs for time-slot three through time-slot ten (TS-3 through TS-10) as determined by the Counter circuit outputs. During TS-3, TS-4, TS-5, and/or TS-6 the D-A Converter can encode a SPACE instruction as determined by inputs from the Counter circuit (Zero-Cancel Logic). A SPACE instruction encoded in a time-slot results in a blank space for the corresponding digit position.

TABLE 3-1

7D14 READOUT ENCODING FORMAT

Time-Slot Number	Description	
	Channel 1	Channel 2
TS-1	Determines decimal position.	Encodes JUMP instruction in MANUAL GATE mode.
TS-2	Encodes to indicate over-range measurement.	Not used.
TS-3	Encodes most significant (8th) digit of measurement (count) display, or SPACE instruction.	Not used.
TS-4	Encodes 7th digit of count display, or SPACE instruction.	Encodes M (mega-) and k (kilo-) prefixes.
TS-5	Encodes 6th digit of count display, or SPACE.	Encodes H.
TS-6	Encodes 5th digit, or SPACE.	Encodes z.
TS-7	Encodes 4th digit.	Not used.
TS-8	Encodes 3rd digit.	Not used.
TS-9	Encodes 2nd digit.	Not used.
TS-10	Encodes 1st digit.	Not used.

Time-slot pulse TS-2 from the oscilloscope readout system is connected to the Over-Range Indicator stage. The Over-Range Indicator stage encodes the Channel 1 outputs for $>$ (greater then symbol) on command of the $\overline{\text{OVERFLOW}}$ input.

The MEASUREMENT INTERVAL Switch Logic connects time-slot pulse TS-1 to the Decimal Logic stage or to the Measurement Units Logic stage. Also, the MEASUREMENT INTERVAL Switch Logic stage provides logic level outputs to indicate the switch setting to the previously mentioned stages and to the Time Base and Control circuit. The INTERNAL output to the Time Base and Control circuit indicates operation in the internal gate or MANUAL GATE modes.

The Decimal Logic stage encodes the Channel 1 outputs to determine the position of the decimal in the measurement display. The Measurement Units Logic stage encodes the Channel 2 outputs to display the proper measurement units or the JUMP instruction as determined by the MEASUREMENT INTERVAL Switch Logic outputs.

Digital-to-Analog Converter

Digital-to-Analog (D-A) Converter U560 produces an output current which encodes the readout system Channel 1 Column output for time-slots TS-3 through TS-10. The level of this output current is determined by inputs from the Multiplexer, Time-Slot Inverters, and Zero-Cancel Logic stages. During time-slots TS-3 through TS-6, the output current encodes either decimal digits or a SKIP instruction as determined by the Zero-Cancel Logic inputs.

Fig. 3-14 shows the input and output configuration of U560. The output of U560 is a current into pin 15, shown

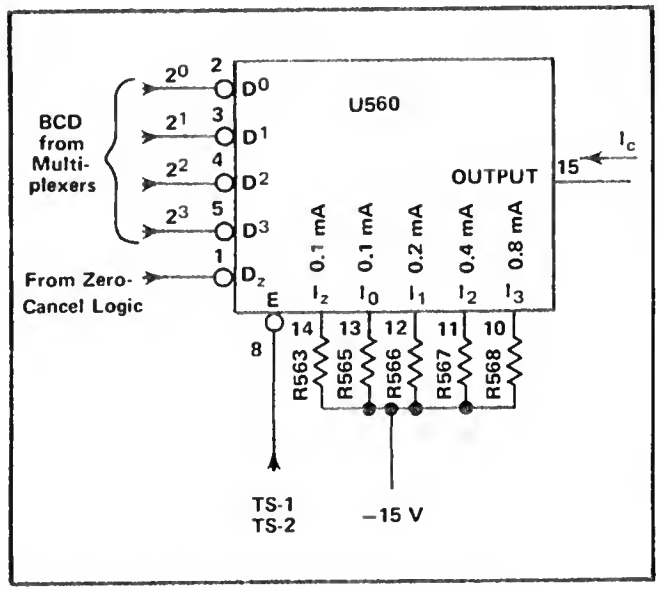

Fig. 3-14. Input and output configuration for U560.

as I_C in Fig. 3-14. Resistors R563-R565-R566-R567-R568 between the I-inputs and −15 volts set the I-input currents at the levels shown in Fig. 3-14. A LO level applied to a D-(data) input directs the current set at the corresponding I-input to pin 15 to provide the I_C output (e.g., LO at D^0 directs I_O current to pin 15). HI level TS-1 and TS-2 inputs to the E-input (enable) at pin 8 inhibit an output during these time-slots.

BCD inputs to U560 enable an I_C analog output level which is 0.1 milliampere (mA) less than necessary to encode the desired decimal digit. A LO level applied to the D_Z-input at pin 1 directs the current set at the I_Z-input to pin 15 to add 0.1 mA to the I_C output. The Time-Slot Inverter HI-level outputs during TS-7 through TS-10 are inverted by Q515 and applied to the D_Z-input. These inputs enable U560 to produce an I_C output as encoded by the BCD inputs at these time-slots. Inputs to the D_Z-input during time-slots TS-3 through TS-6 are determined by the inputs to the Zero-Cancel Logic stage (see the discussion of the Zero-Cancel Logic stage under Counter Circuit).

Decimal Logic and Measurement Units Logic

These stages encode the readout system for decimal point position and measurement units as determined by MEASUREMENT INTERVAL switch S60.

MEASUREMENT INTERVAL Switch Logic. S60 provides logic level outputs to indicate the switch setting. The time-slot TS-1 input is switched through S60 to either the Decimal Logic or the Measurement Units Logic stage. S60 also provides the INTERNAL output to the Time Base and Control circuit. When this output is HI, internal gate (1 ms – 10 s) operation is indicated. When the INTERNAL output is LO, manual or external gate operation is indicated.

When one of the S60 internal gate buttons (1 ms – 10 s) is in, +5 volts applied through R660 provides a HI INTERNAL output level. A LO level (ground) is provided on one of five output lines to indicate which internal gate button is in. For example, if the 1 ms button is in, a LO $\overline{1\ ms}$ output level is connected to CR655-CR676. TS-1 is connected through S60 to the Decimal Logic stage under the internal gate condition.

When one of the MANUAL GATE buttons (ON-OFF) is in, R660 is connected to ground to hold the INTERNAL output LO. TS-1 is connected to the Measurement Units Logic stage to encode a JUMP instruction.

The S60 $\overline{1\ ms}$, $\overline{10\ ms}$, $\overline{100\ ms}$, $\overline{1\ s}$, and $\overline{10\ s}$ outputs are applied to the Decimal Logic and Measurement Units Logic stages through diode-logic NOR gates. A simplified diagram of the diode-logic NOR gates, Decimal Logic, and Measurement Units Logic stages is shown in Fig. 3-15.

Decimal Logic. This stage encodes the Channel 1 Column and Row output current levels for time-slot one (TS-1) to determine placement of the displayed decimal point. The level of the Column output current is determined by the inputs from the MEASUREMENT INTERVAL Switch Logic. Also, decimal-logic Decimal Position Five and Decimal Position Six (DP-5 and DP-6) outputs are provided to the Zero-Cancel Logic stage. Q653, Q658, Q663, and Q670 are saturated due to the forward bias levels set at their bases by the resistor voltage dividers. This stage operates as follows:

When the $\overline{100\ ms}$ input is LO, the other inputs are HI. This LO level reverse biases Q653; the collector is HI to provide the DP-5 output. At the same time, TS-1 interrogates R671-R659-R673-R674. The TS-1 current through R674 encodes the Row Current output for decimals. The TS-1 current through R673 encodes the Column Current output for decimal point location 5. The TS-1 current through R671 and R659 is sinked to ground through saturated transistors Q670 and Q658 respectively.

When the $\overline{10\ ms}$ or $\overline{10\ s}$ input is LO, the CR665-CR666 NOR-gate output is LO. This LO level reverse biases Q663 and Q670. The collector of Q663 goes HI to provide the DP-6 output. Due to reverse bias, Q670 is cut off to allow the TS-1 current through R671 to be added to the Column Current output through CR671. This adds 0.1 mA to the TS-1 current through R673 to encode decimal point location 6.

Similarly, a LO $\overline{1\ ms}$ or $\overline{1\ s}$ input reverse biases Q658 through diode NOR-gate CR656-CR655 to allow TS-1 current through R659 to pass through CR659. This adds 0.2 mA to the TS-1 current through R673 to encode decimal point location 7.

Measurement Units Logic. This stage encodes the Channel 2 Column and Row Current output levels for TS-4, TS-5, and TS-6. R686-R687 and R688-R689 encode the Column and Row Current outputs for TS-5 and TS-6 respectively (see Table 3-1, 7D14 Readout Encoding Format). R683-R684 set the Column and Row Current outputs for TS-4 to encode k (kilo- prefix). When the $\overline{1\ s}$ or $\overline{10\ s}$ input is LO, Q680 is saturated by the voltage level set at its base by voltage divider R677-R678-R679. The TS-4 current through R681 is sinked to ground through Q680. When the $\overline{1\ ms}$, $\overline{10\ ms}$, or $\overline{100\ ms}$ input is LO, the output of diode-logic NOR gate CR676-CR677-CR678 is LO to reverse biase Q680. This allows the TS-4 current through R681 to add 0.1 mA to the Column Current output to encode an M (mega- prefix).

When TS-1 is applied to the Measurement Units Logic stage through S60 for MANUAL GATE operation (see MEASUREMENT INTERVAL Switch Logic), R682 encodes the Row Current output for a JUMP instruction (1.3 mA).

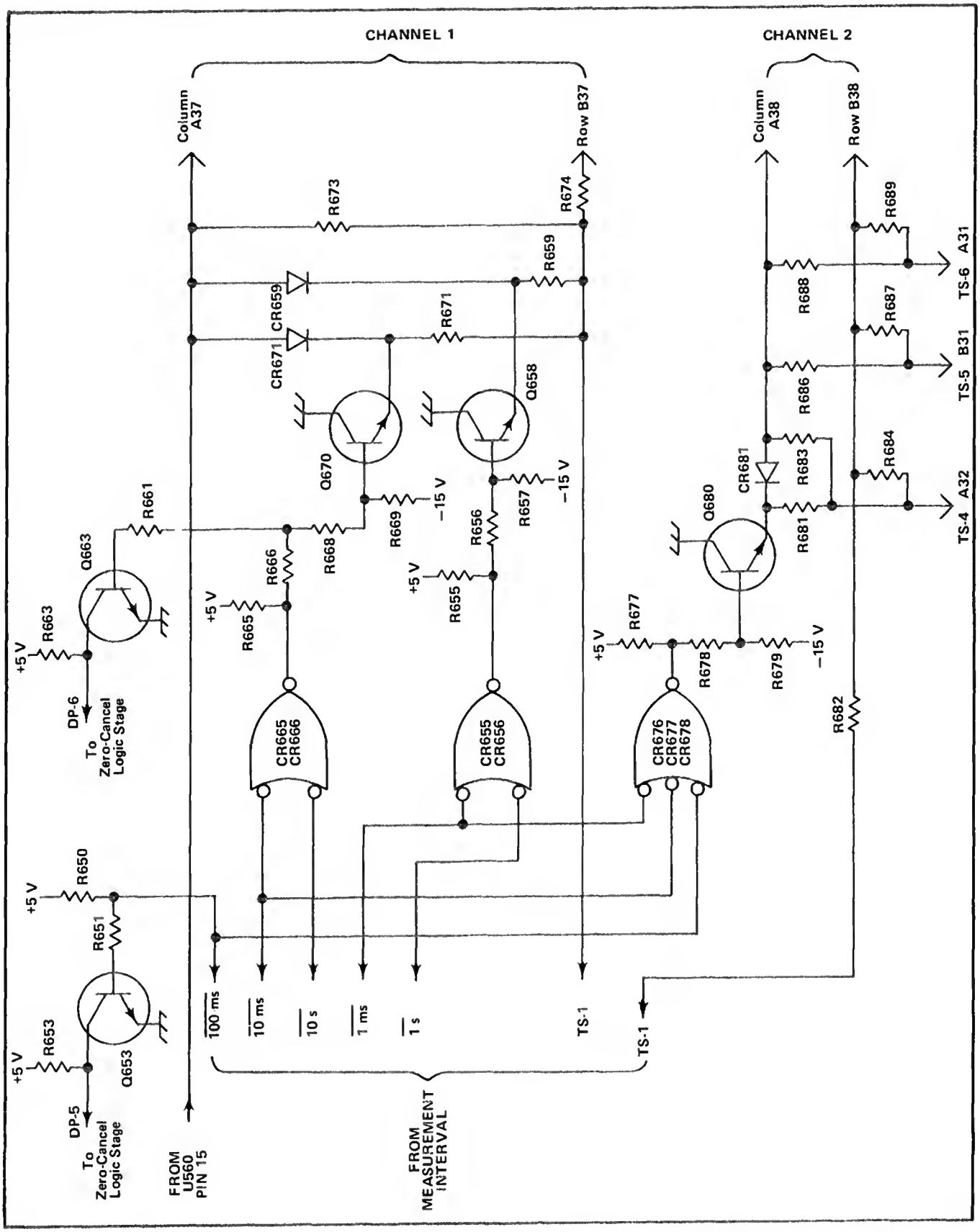

Fig. 3-15. Simplified schematic diagram of the diode-logic NOR gates, Decimal Logic, and Measurement Units Logic stages.

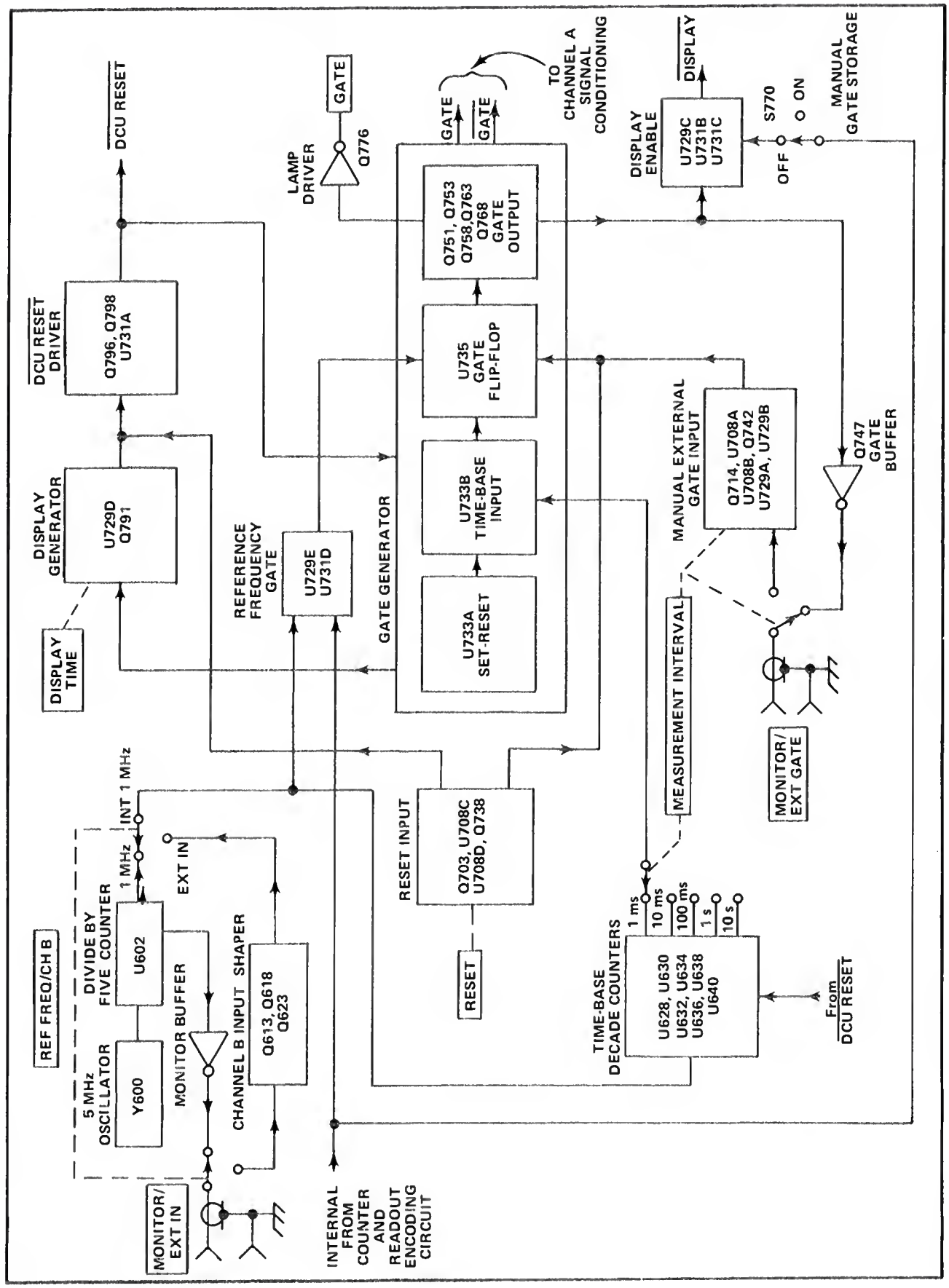

Fig. 3-16. Time Base and Control circuit detailed block diagram.

TIME BASE AND CONTROL CIRCUIT

General

The Time Base and Control circuit generates the control signals described in the Control Signals discussion at the start of this section. A block diagram of the Time Base and Control circuit is shown in Fig. 3-16. This diagram shows the output signals produced by this stage and the basic interconnections between blocks. The interconnections shown are intended only to indicate interrelation between blocks; and do not indicate a direct connection, or that only a single connection is made between the given blocks. Details of the inter-relation between stages in this circuit are given in the circuit description which follows. A schematic of this circuit is shown on Diagram 5 in the Diagrams section.

Switch Logic

The outputs from the Time Base and Control circuit determine the 7D14 measurement mode. These outputs are a function of the MEASUREMENT INTERVAL, REF FREQ/CH B, RESET, and Manual Gate Storage switches. The relationship between these switches and the stages in the Time Base and Control circuit is as follows:

MEASUREMENT INTERVAL. In the 1 ms through 10 s switch position, the Gate Generator stage GATE output is controlled by one of the outputs of the Time Base Decade Counters stage. The switch position nomenclature (e.g., 1 ms) refers to the GATE output "on" time resulting from a one-megahertz reference-frequency input. Also, in these positions the selected gate is connected to the MONITOR output connector through the Gate Buffer.

In the MANUAL GATE switch settings, the GATE output is controlled manually by the ON and OFF pushbuttons through the Manual/External Gate Input stage. When the OFF button is in, the GATE output can be controlled by an external gating signal connected to the EXT GATE input connector.

REF FREQ/CH B. In the INT 1 MHz position, the Divide By Five Counter one-megahertz output is connected to the Time Base Decade Counters and to the Reference Frequency Gate stage. Also, the Monitor Buffer one-megahertz output is provided to the MONITOR output connector.

When the EXT IN button is in, the EXT IN connector is connected to the Channel B Input Shaper stage; and, the Channel B Input Shaper output is provided to the Time Base Decade Counters and to the Reference Frequency Gate stage.

RESET. The RESET pushbutton, when pressed in, grounds an input to the Reset Input stage. This results in a HI RESET output. When the RESET button is released, the other input to the Reset Input stage is grounded. This results in a LO RESET output.

Manual Gate Storage. The Counter and Readout Encoding circuit INTERNAL output is connected to the Display Enable stage through the off position of the Manual Gate Storage switch. When the INTERNAL input is HI, the switch position has no effect on the Display Enable stage $\overline{\text{DISPLAY}}$ output. When the INTERNAL input is LO, it can be applied to the Display Enable stage through the off position of the Manual Gate Storage switch to hold the $\overline{\text{DISPLAY}}$ output LO.

Block Diagram Description. The 5-MHz Oscillator is a temperature-compensated crystal oscillator. The 5-MHz output is divided by the Divide by Five Counter stage to provide a one-megahertz output to the Monitor Output stage and to the REF FREQ/CH B switch.

The Channel B Input Shaper shapes and amplifies signals connected to the REF FREQ/CH B EXT IN connector when the EXT IN button is in.

The Time Base Decade Counters count the reference frequency selected by the REF FREQ/CH B switch, S50. This stage consists of seven cascaded decade counters. Outputs from the last five decade counters provide reference-frequency division ratios of 10^3, 10^4, 10^5, 10^6, and 10^7. These outputs are selected by the MEASUREMENT INTERVAL switch to provide a means of turning the Gate Generator on for precise time intervals. The time intervals selected are the reciprocal of the divided reference-frequency input. The MEASUREMENT INTERVAL switch pushbuttons are labelled according to the time interval selected for a one-megahertz reference-frequency input.

The Reset Input stage produces the RESET signal to the Gate Generator, Display Enable, and $\overline{\text{DCU RESET}}$ Driver stages on command of the front-panel RESET pushbutton or reset signal applied to the pin-jack connector.

The Manual/External Gate Input stage provides outputs to the Gate Generator to turn the GATE output on or off by means of the MEASUREMENT INTERVAL-MANUAL GATE pushbuttons, or by means of an external gate signal applied to the EXT GATE connector.

The Gate Generator stage generates the GATE control signal. The complementary GATE and $\overline{\text{GATE}}$ outputs are provided to several stages within the Time Base and Control circuit and to the Channel A Signal Conditioning circuit. The GATE "on" time is established by inputs from the Time Base Decade Counters, Reference Frequency Gate, and Manual/External Gate Input stages as determined by the MEASUREMENT INTERVAL switch. The GATE "on" time can be terminated by an input from the Reset Input stage. At the end of the GATE "on" time, a CLEAR output is provided to the Display Enable stage. Also, an output is provided to the Lamp Driver to illuminate the GATE indicator lamp when the GATE is "on".

The Display Enable stage produces the LO level DISPLAY output as determined by the inputs to this stage. The INTERNAL input is applied to this stage in the off position of the Manual Gate Storage switch. When the INTERNAL input is HI, the setting of the Manual Gate Storage switch has no effect on the operation of this stage. The Display Enable stage will produce the DISPLAY output on command of the Gate Generator CLEAR output, or on command of the Reset Input stage RESET output.

When the INTERNAL input is LO and the Manual Gate Storage switch is in the off position, the DISPLAY output is held LO. When the INTERNAL input is LO and the Manual Gate Storage switch is in the on position, the DISPLAY output is produced on command of the other inputs as mentioned previously.

The Display Generator stage produces an output at a time after the end of the GATE "on" time as determined by the DISPLAY TIME control setting. The Display Generator output is amplified by the DCU RESET Driver stage to provide the DCU RESET output. Also, the DCU RESET Driver stage produces the DCU RESET output on command of the Reset Input stage RESET output signal.

5 MHz Oscillator

The 5 MHz Oscillator, Y600, provides a precise five-megahertz output. An internal adjustment provides a means of setting the oscillator frequency. The five-megahertz output is connected to the Divide by Five Counter stage.

Divide by Five Counter

The Divide by Five Counter stage consists of IC U602. The five-megahertz input is applied to the T (trigger) input at pin 6. The counting operation is performed on the negative-going transition at the T input. The one-megahertz output at pin 12 is provided to the Reference Frequency Gate when the REF FREQ/CH B switch is in the INT 1 MHz position, and to the Monitor Buffer stage. In the EXT IN position of the REF FREQ/CH B switch, a LO level (ground) is applied to the direct-clear input of U602 at pin 13. This LO holds the output LO.

Monitor Buffer

The Monitor Buffer stage consists of Q606. This stage amplifies the one-megahertz output of the Divide by Five Counter stage. The Monitor Buffer output is connected to the REF FREQ/CH B MONITOR output connector when the REF FREQ/CH B switch is in the INT 1 MHz position.

Channel B Input Shaper

The Channel B Input Shaper shapes and amplifies signals connected to the REF FREQ/CH B EXT IN connector when the EXT IN button is pressed.

The signal connected to the EXT IN connector is AC-coupled to the base of Q613 through C610, R610, and C611. Q613 and Q618 make up an emitter-coupled bistable multivibrator. The multivibrator shapes the input signal to provide a square-wave output to Q623 through R621-C621. Q623 amplifies the square-wave signal. The output at the collector of Q623 is connected to ground when the INT 1 MHZ button is in, or connected to U729E when the EXT IN button is in.

Reference Frequency Gate

The Reference Frequency Gate stage consists of NAND-gate U731D and isolation-transistor U729E. The reference-frequency signal selected by the REF FREQ/CH B switch is applied to one input of the NAND gate through U729E. The INTERNAL input is connected to the other NAND-gate input. When INTERNAL is HI (1 ms through 10 s positions of the MEASUREMENT INTERVAL switch), the reference-frequency signal is provided from the NAND-gate output (pin 11) to the T-input of U735 in the Gate Generator stage.

Time Base Decade Counters

The Time Base Decade Counters count the input selected by the REF FREQ/CH B switch, S50, and applied to pin 8-U628 (trigger). The counters consist of seven cascaded divide-by-ten counters, U628-U630-U632-U634-U636-U638-U640.

Each decade is clocked with a negative-going transition applied to the T input, pin 8. With the exception of U628, each decade is clocked only when the output of the preceding decade changes from HI to LO.

The DCU RESET input to pin 13-U628 and pin 1 of the remaining decades reset the counters for an output of 9999990; i.e., pin 12-U640 through U630 is HI, and pin 12-U628 is LO.

Reset Input

The Reset Input stage provides an input to the Time Base and Control circuit from the RESET pushbutton and pin-jack connector. When the RESET button is pressed in, or when a HI level is applied to the base of Q703 through the pin-jack connector, a HI level RESET output is set at pin 13-U708D. When the RESET button is released, or a LO level is applied to the base of Q703, the output at pin 13-U708D returns LO. Q738 inverts the HI RESET level to provide a LO level to the direct-clear input of U735 in the Gate Generator stage.

Manual/External Gate Input

RS flip-flop U708A-U708B, in conjunction with Q714-Q742-U729A-U729B, provides outputs to the Gate

Generator to turn the GATE output "on" or "off" as determined by the MANUAL GATE pushbuttons or by an external gating signal applied to the EXT GATE input connector.

This stage provides a LO output to the direct-clear input of U735 at pin 14 to turn the Gate Generator GATE output "off", or a LO output to the direct-set input of U735 at pin 10 to turn the GATE output "on".

The INTERNAL input is applied to the base of Q714 through R717, and to the base of U729B through CR722-R722. When either of the MANUAL GATE pushbuttons is in, the INTERNAL input is LO. The levels at the inputs and outputs of U708A-U708B and at the collector of Q742 for the MANUAL GATE ON and OFF pushbutton settings are shown in Fig. 3-17. When the collector of Q742 is LO, the GATE is "on" and when U708B-pin 4 is LO, the GATE is "off".

When the MANUAL GATE OFF button is in, the EXT GATE input connector is connected to the base of Q714 through R716-C716. A HI level applied to the EXT GATE connector is inverted by Q714 to provide a LO to U708B at pin 5. This will cause the level at U708B-pin 4 to go HI. This LO to HI transition is coupled to the base of U729A through C743 to momentarily turn U729A on. The collector of U729A goes LO to provide an output to the direct-set input of U735. When the input to the EXT GATE connector goes LO, the collector of Q714 goes HI. As a result, the level at U708B-pin 4 goes LO to provide a clear command to the direct-clear input of U735.

The INTERNAL input is HI when the MEASUREMENT INTERVAL switch is set to one of the internal-gate positions, 1 ms through 10 s. This HI level inhibits the Manual/External Gate Input stage by applying forward bias to saturate U729B through CR722-R722 and Q714 through R717. Due to saturation, the collectors of Q714 and U729B are LO. The LO at the collector of Q714 holds U708B-pin 5 LO. This results in a HI level output at U708B-pin 4. The LO at the collector of U729B applies reverse bias to U729A to keep its collector HI. As a result, U735 is not affected by the Manual/External Gate Input stage under this condition.

MANUAL	U708A-U708B			Q742
GATE	Pin 5	Pin 2	Pin 4	Collector
ON	LO	HI	HI	LO
OFF	HI	LO	LO	HI

Fig. 3-17. Manual/External Gate Input stage input and output levels for MANUAL GATE operation.

Gate Generator

The Gate Generator stage includes three J-K flip-flops with direct-set and direct-clear inputs. U735 generates the GATE and $\overline{\text{GATE}}$ output signals. Inputs to U735, U733A, and U733B determine the state of the GATE signal. The Gate Generator stage outputs are provided by two emitter-coupled transistor pairs, Q751-Q753 and Q758-Q763. These transistor pairs isolate the U735 outputs from the circuits being driven, and also provide signal gain.

U733A is connected as an RS flip-flop. The 1-output (pin 11) is connected to the U733B J-input and to the Display Generator stage (U729D). The 0-output (pin 10) is connected to the Manual/External Gate Input stage through R724.

The $\overline{\text{DCU RESET}}$ signal (produced by U731A) is coupled through C783-R783 to the base of Q781. When the $\overline{\text{DCU RESET}}$ input goes HI, the LO to HI transition momentarily turns on Q781 to pull its collector LO. This LO applied to the U733A direct-set input (pin 7) sets U733A for a HI 1-output.

At the end of the GATE "on" time, a LO $\overline{\text{CLEAR}}$ command is provided to the U733A direct-clear input (pin 8). This clears U733A to provide a LO 1-output.

Triggered J-K flip-flop U733B is clocked by the Time Base Decade Counters output to turn the Gate Generator GATE output "on" for the gate time selected by the MEASUREMENT INTERVAL switch. The U733B 1- and 0-outputs set the levels at the U735 J- and K- inputs respectively. An input/output table applicable to U733B or U735 is shown in Fig. 3-18.

The level at the U733B J-input is the U733A 1-output level. The level at the U733B K-input is the U733B 1-output level. The LO $\overline{\text{DCU RESET}}$ input to the direct-clear input clears U733B for a LO 1-output level.

Inputs		Outputs	
		Condition after trigger pulse	
J	K	1	0
LO	LO	No change	
LO	HI	LO	HI
HI	LO	HI	LO
HI	HI	Changes state	

A LO input to the direct-set input sets the 1 output HI.
A LO input to the direct-clear input sets the 1 output LO.

Fig. 3-18. Input/output table for U733B or U735.

After a LO $\overline{\text{DCU RESET}}$ input to the direct-clear input, U733B 1- and 0-outputs are LO and HI respectively. The J-input is HI (U733A is set by $\overline{\text{DCU RESET}}$); the K-input, connected to the 1 output, is LO. The next HI to LO transition at the T (trigger) input sets the 1 and 0 outputs of U733B to be HI and LO respectively. The J- and K-inputs are now both HI. The next HI to LO transition at the T-input will toggle U733B.

Triggered J-K flip-flop U735 generates the GATE signal as determined by the inputs. The GATE is "on" when the U735 1-output (pin 9) is HI and the 0-output (pin 7) is LO. U735 is triggered on the negative-going transition of the Reference Frequency Gate stage (U731D) output applied to the T-input. When triggered, the output changes states in response to the levels set at the J- and K-inputs prior to the trigger.

When the J- and K-inputs are set HI and LO respectively by the U733B outputs, the next negative-going transition of the Reference Frequency Gate stage output will trigger U735 to set the 1-output HI to turn the GATE "on". When the J- and K-inputs are set LO and HI respectively, the next negative-going transition at the T input will set the 1 output LO to turn the GATE "off".

A LO applied to the direct-set input over-rides the J-, K-, and T-inputs to set the 1-output HI (GATE "on"). A LO applied to the direct-clear input over-rides the J-, K-, and T-inputs to set the 1-output LO (GATE "off").

A LO applied to the direct-set input from the Manual/External Gate Input stage (U729A or P742) will turn the GATE "on". A LO to the direct-clear input from the Manual/External Gate Input stage (U708B) or from the Reset Input stage (Q738) will turn the GATE "off".

The U735 1- and 0-outputs are connected to the bases of Q751 and Q753 through R750 and R754 respectively. Q751 and Q753 translate the logic levels at the U735 outputs to provide the GATE and $\overline{\text{GATE}}$ outputs to the Channel A Signal Conditioning circuit through T755. Q751 and Q753 invert the U735 outputs so that the GATE output is HI with respect to $\overline{\text{GATE}}$ when the GATE is "on".

The GATE and $\overline{\text{GATE}}$ signals are also connected to Q763 and Q758 respectively. Q758 and Q763 invert the Q751-Q753 outputs to provide logic levels corresponding to the GATE "on" and "off" states to other Time Base and Control circuit stages. When the Gate is "on", the collector of Q758 provides a HI output to the Display Generator (U729D), and to the Lamp Driver (Q776) to turn on the GATE indicator light (DS80). When the GATE is "on", the collector of Q763 is LO. When the GATE is turned off, the LO to HI transition at the collector of Q763 is coupled through C765-R765 to momentarily turn on Q768. The collector of Q768 goes LO to provide a LO $\overline{\text{CLEAR}}$ output.

Display Enable

The Display Enable stage consists of inverter transistor U729C, inverted-input NOR gate U731B, and NAND gate U731C. This stage produces the LO $\overline{\text{DISPLAY}}$ output when a LO is applied to either input of U731B.

When the INTERNAL input is LO, and the Manual Gate Storage switch is in the off position, the $\overline{\text{DISPLAY}}$ output is held LO. When the INTERNAL input is HI, or the Manual Gate Storage switch is in the on position, the output is determined by the level applied to U731B-pin 5. Quiescently, +5 volts applied to U731B-pin 5 through R768 holds pin 5 HI.

The Gate Generator $\overline{\text{CLEAR}}$ output (at the collector of Q768) is connected directly to U731B-pin 5. When $\overline{\text{CLEAR}}$ goes LO, U731B-pin 8 goes LO to provide the $\overline{\text{DISPLAY}}$ output. The Reset Input stage RESET signal is connected to the base of U729C through R772. When RESET is HI, the collector of U729C is LO. This results in a LO $\overline{\text{DISPLAY}}$ output.

Display Generator

The Display Generator provides a positive pulse output to the $\overline{\text{DCU RESET}}$ Driver through R794. This pulse is generated by relaxation oscillator Q791, a unijunction transistor. U729D acts as a three-input NOR gate to inhibit Q791. A HI level is applied to the base of U729D through CR786 when the DISPLAY TIME control is set to ∞ or through R759 when the GATE is on to inhibit Q791. When the DISPLAY TIME control is not set to ∞, the Display Generator is enabled when the GATE ends and U733A is cleared (the 1-output is LO). The LO applied to the base of U729D when all inputs are LO reverse biases U729D to allow C788 to charge to a positive level sufficient to forward bias Q791. DISPLAY TIME R70 adjusts the RC time-constant of R70-R789-C788 to set the time required to charge C788 to a level which will switch on Q791. When C788 charges positive enough to forward bias Q791, it discharges through Q791, R793, and L793 to generate a positive pulse output across L793.

$\overline{\text{DCU RESET}}$ Driver

The $\overline{\text{DCU RESET}}$ Driver, Q796-Q798-U731A, provides the $\overline{\text{DCU RESET}}$ output to the First Decade Counter circuit, Counters and Readout Encoding circuit, and to several stages within the Time Base and Control Circuit. The positive-going pulse input from the Display Generator or a HI level input from the Reset Input stage applied to the

base of Q796 is amplified and inverted by this stage to provide the DCU RESET output.

INTRODUCTION TO THE READOUT SYSTEM

Introduction

The following discussion is provided to acquaint the 7D14 user with the Readout System employed in Tektronix 7000-Series Oscilloscopes. Since the oscilloscope Readout System provides the digital readout for the 7D14, it is necessary to relate the function of the 7D14 to the Readout System to gain a better understanding of the 7D14 operation. A detailed circuit description of the 7000-series Readout System is given in the oscilloscope instruction manual.

The Readout System

The Readout System in the 7000-series oscilloscopes provides alpha-numeric display of information encoded by the plug-in units. This display is presented on the CRT and is written by the CRT beam on a time-shared basis with the analog waveform display.

The Readout System produces a pulse train consisting of ten negative-going pulses called time-slots. These pulses represent a possible character in a readout word, and each is assigned a time-slot number corresponding to its position in the word. Each time-slot pulse is directed to one of ten output lines, labelled TS-1 through TS-10 (time-slots one through ten), which are connected to the vertical and horizontal plug-in compartments. Two output lines, row and column, are connected from each channel (two channels per plug-in compartment) back to the Readout System.

Data is encoded on these output lines either by connecting resistors between them and the time-slot input lines or by generating equivalent currents. The resultant output is a sequence of analog current levels on the row and column output lines. The row and column current levels are decoded by the Readout System to address a character matrix during each time-slot, thus selecting a character to be displayed or a special instruction to be followed.

SECTION 4
MAINTENANCE

Change information, if any, affecting this section will be found at the rear of this manual.

Introduction

This section of the manual contains maintenance information for use in preventive maintenance, corrective maintenance, and troubleshooting of the 7D14.

Further maintenance information relating to component color codes and soldering techniques can be found in the instruction manuals for the 7000-series oscilloscopes.

PREVENTIVE MAINTENANCE

General

Preventive maintenance, consisting of cleaning, visual inspection, lubrication, etc., performed on a regular basis, will improve the reliability of this instrument. Periodic checks on the semiconductor devices used in the unit are not recommended as a preventive maintenance measure. See semiconductor-checking information given under troubleshooting.

Cleaning

CAUTION

Avoid the use of chemical cleaning agents which might damage the plastics in this instrument. Avoid chemicals containing benzene, toluene, xylene, acetone, or similar solvents.

Front Panel. Loose dust may be removed with a soft cloth or a dry brush. Water and mild detergent may be used; however, abrasive cleaners should not be used.

Interior. Cleaning the interior of the unit should precede calibration, since the cleaning process could alter the settings of the calibration adjustments. Use low-velocity compressed air to blow off the accumulated dust. Hardened dirt can be removed with a soft, dry brush, cotton-tipped swab, or cloth dampened with a mild detergent and water solution.

Lubrication

Use a cleaning-type lubricant on shaft bushings, interconnecting plug contacts, and switch contacts. Lubricate switch detents with a heavier grease. A lubrication kit containing the necessary lubricating materials and instructions is available through any Tektronix Field Office. Order Tektronix Part No. 003-0342-00.

Recalibration

To ensure accurate measurements, the 7D14 should be checked after each 1000 hours of operation or every six months if used infrequently. A complete performance check procedure is given in Part I of Section 5.

The performance check procedure can be helpful in isolating major troubles in the unit. Moreover, minor troubles not apparent during regular operation may be revealed and corrected.

TROUBLESHOOTING

General

The following is provided to augment information contained in other sections of this manual for use in troubleshooting the 7D14. The schematic diagrams, Circuit Description, and Calibration sections should be used to full advantage. The Circuit Description section gives detailed information on circuit behavior and output requirements.

Troubleshooting Aids

Diagrams. Circuit diagrams are given on foldout pages in Section 7. The circuit number and electrical value of each component in this instrument are shown on the diagrams. Important voltages are also shown.

Circuit Boards. The circuit boards used in the 7D14 are outlined on the schematic diagrams, and a photograph of each board is shown on the back of the circuit diagram foldout pages. Each board-mounted electrical component is identified on the photograph by its circuit number.

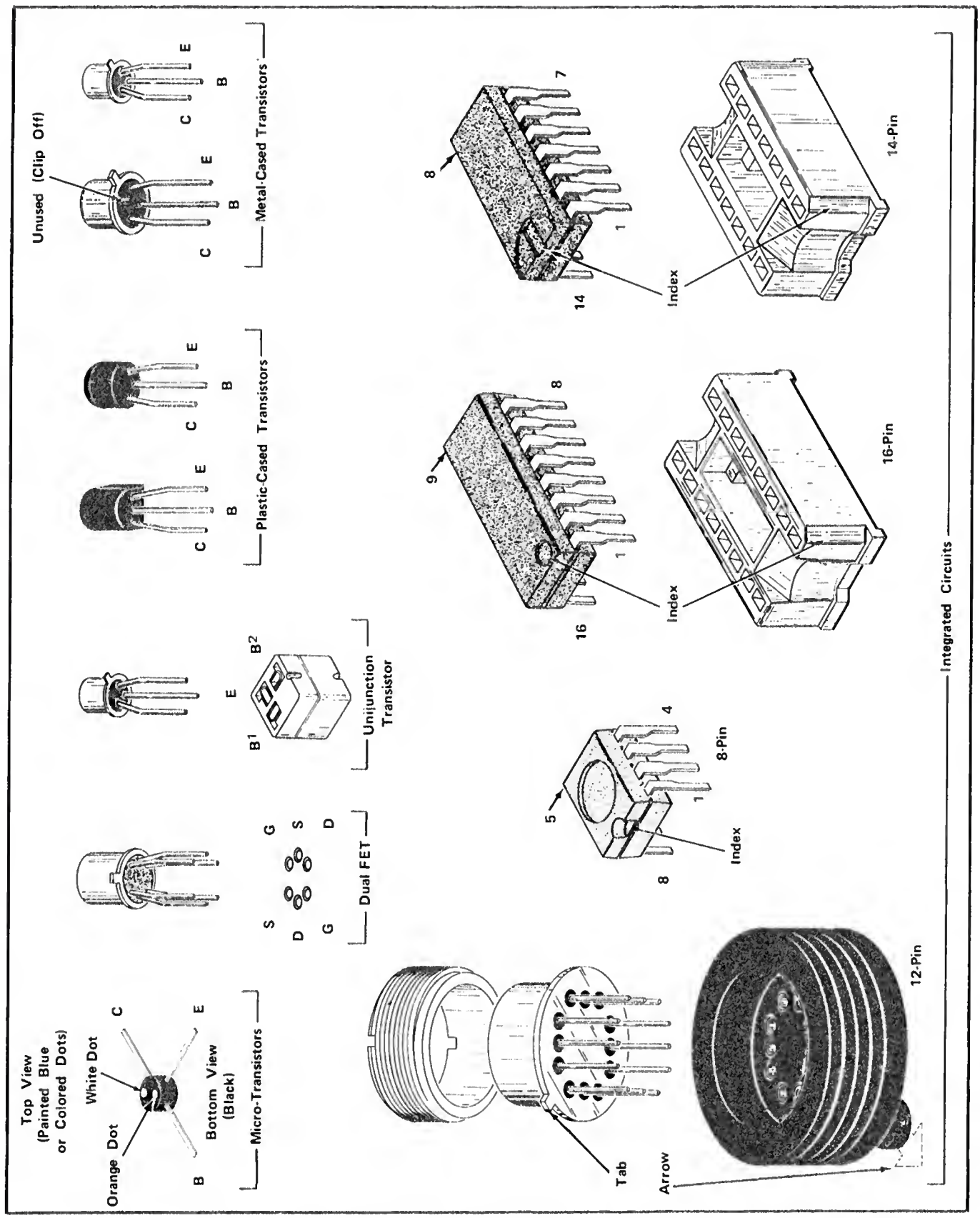

Fig. 4-1. Electrode configuration for semiconductors in this instrument.

Component and Wiring Color Code. Colored stripes or dots on resistors and capacitors signify electrical values, tolerances, etc., according to the EIA standard color code. Components not color coded usually have the value printed on the body.

The insulated wires used for interconnection in the 7D14 are color coded to facilitate tracing a wire from one point to another in the unit.

Semiconductor Lead Configuration. Fig. 4-1 shows the lead configuration of the semiconductor devices used in this instrument.

Troubleshooting Equipment

The following equipment is useful for troubleshooting the 7D14:

1. Semiconductor Tester—Some means of testing the transistors, diodes, and FET's used in this instrument is helpful. A transistor-curve tracer such as the Tektronix Type 576 will give the most complete information.

2. DC Voltmeter and Ohmmeter—A voltmeter for checking voltages within the circuit and an ohmmeter for checking resistors and diodes are required.

3. Test Oscilloscope—A test oscilloscope is required to view waveforms at different points in the circuit.

A Tektronix 7000-series Oscilloscope with 7D13 Digital Multimeter unit, 7B-series Time-Base unit, and a 7A-series Amplifier unit with a 10X probe will meet the needs for items 2 and 3.

Troubleshooting Procedure

This troubleshooting procedure is arranged in an order which checks the simple trouble possibilities before proceeding with extensive troubleshooting.

1. Check Control Settings. Incorrect settings of the 7D14 controls can indicate a trouble that does not exist. If there is any question about the correct function or operation of a control or front-panel connector, see the Operating Instructions section.

2. Check Associated Equipment. Before proceeding with troubleshooting of the 7D14, check that the equipment used with this instrument is operating correctly. If possible, substitute a 7D14 known to be operating correctly into the indicator unit and see if the problem persists. Check that the inputs are properly connected and that the interconnecting cables are not defective.

3. Visual Check. Visually check the portion of the instrument in which the trouble is suspected. Many troubles can be located by visual indications, such as unsoldered connections, broken wires, damaged circuit boards, damaged components, etc.

4. Check Instrument Performance. Check the calibration of the unit, or the affected circuit by performing Part I — Performance Check of Section 5. The apparent trouble may only be a result of misadjustment and may be corrected by calibration. Complete calibration instructions are given in Part II of Section 5.

5. Check Voltages and Waveforms. Often the defective component or stage can be located by checking for the correct voltage or waveform in the circuit. Typical voltages and waveforms are given on the diagrams; however, these are not absolute and may vary slightly between instruments. To obtain operating conditions similar to those used to take these readings, see the instructions in the Diagrams section.

6. Check Individual Components. The following methods are provided for checking the individual components in the 7D14. Components which are soldered in place are best checked by disconnecting one end to isolate the measurement from the effects of surrounding circuitry.

A. TRANSISTORS AND INTEGRATED CIRCUITS. The best check of transistor and integrated circuit operation is actual performance under operating conditions. If a transistor or integrated circuit is suspected of being defective, it can best be checked by substituting a component known to be good; however, be sure that circuit conditions are not such that a replacement might also be damaged. If substitute transistors are not available, use a dynamic tester (such as Tektronix Type 576). Static-type testers may be used, but since they do not check operation under simulated operating conditions, some defects may go unnoticed. Fig. 4-1 shows base pin and socket arrangements of semiconductor devices. Be sure the power is off before attempting to remove or replace any transistor or integrated circuit.

Integrated circuits can be checked with a voltmeter, test oscilloscope, or by direct substitution. A good understanding of the circuit description is essential to troubleshooting circuits using integrated circuits. Use care when checking voltages and waveforms around the integrated cir-

cuits so that adjacent leads are not shorted together. An integrated-circuit test clip provides a convenient means of clipping a test probe to the 14- and 16-pin integrated circuits. This device also doubles as an integrated-circuit extraction tool.

B. DIODES: A diode can be checked for an open or shorted condition by measuring the resistance between terminals. With an ohmmeter scale having an internal source of between 800 millivolts and 3 volts, the resistance should be very high in one direction and very low when the leads are reversed.

CAUTION

Do not use an ohmmeter scale that has a high internal current. High currents may damage the diodes.

C. RESISTORS. Check resistors with an ohmmeter. Resistor tolerance is given in the Electrical Parts List. Resistors normally do not need to be replaced unless the measured value varies widely from the specified value.

D. CAPACITORS. A leaky or shorted capacitor can be detected by checking resistance with an ohmmeter on the highest scale. Use an ohmmeter which will not exceed the voltage rating of the capacitor. The resistance reading should be high after initial charge of the capacitor. An open capacitor can best be detected with a capacitance meter, or by checking whether the capacitor passes AC signals.

7. Repair and Readjust the Circuit. Special techniques required to replace components in this unit are given under Component Replacement. Be sure to check the performance of any circuit that has been repaired or that has had any electrical components replaced. Recalibration of the affected circuit may be necessary.

REPLACEMENT PARTS

Standard Parts

All electrical and mechanical part replacements for the 7D14 can be obtained through your local Tektronix Field Office or representative. However, many of the standard electronic components can be obtained locally in less time than is required to order them from Tektronix, Inc. Before purchasing or ordering replacement parts, check the parts list for value, tolerance, rating, and description.

NOTE

When selecting replacement parts, it is important to remember that the physical size and shape of the component may affect its performance in the instrument. All replacement parts should be direct replacements unless it is known that a different component will not adversely affect the instrument performance.

Special Parts

Some parts are manufactured or selected by Tektronix to satisfy particular requirements, or are manufactured for Tektronix to our specifications. These special parts are indicated in the parts list by an asterisk preceding the part number. Most of the mechanical parts used in this instrument have been manufactured by Tektronix. Order all special parts directly from your local Tektronix Field Office or representative.

Ordering Parts

When ordering replacement parts from Tektronix, Inc., refer to the Parts Ordering Information and Special Notes and Symbols on the page immediately preceding the Electrical Parts List section. Include the following information:

1. Instrument type (7D14)

2. Instrument Serial Number

3. A description of the part (if electrical, include the circuit number).

4. Tektronix Part Number

COMPONENT REPLACEMENT

General

The exploded-view drawings associated with the Mechanical Parts List may be helpful when disassembling or re-assembling individual components or sub-assemblies.

Circuit Board Replacement

In general, the circuit boards used in the 7D14 need never be removed unless they must be replaced. Electrical connections to the boards are made by multiple-pin connectors (multi-pin connectors) and interconnecting pins. If it is necessary to replace a circuit board assembly, use the following procedure.

A. HIGH FREQUENCY COUNTER CIRCUIT BOARD REPLACEMENT.

1. Disconnect the two multi-pin connectors from the circuit board.

2. Remove all the screws holding the board to the chassis or other mounting surface.

3. Using a 7/16-inch open-end wrench, loosen the nut securing the coaxial-cable connector to the rear of the CH A INPUT BNC connector.

4. Slide the nut over the coaxial-cable connector toward the circuit board.

5. Remove the board from the unit while sliding the coaxial-cable connector from the BNC connector.

6. To replace the board, first install the coaxial-cable connector in the BNC connector.

7. Position the board so the securing-screw holders mate with the guide posts.

8. Gently press the circuit board while making sure that all of the interconnecting pins and sockets mate properly.

9. Uniformly tighten the securing screws. Recommended torque, four to six inch-pounds.

10. Tighten the nut on the rear of the CH A INPUT connector.

B. LOGIC AND CONTROL CIRCUIT BOARD REPLACEMENT.

1. Remove the High Frequency Counter circuit board following the procedure given under A.

2. Remove the springs and metal shield from the securing-screw guide posts.

3. Disconnect the multi-pin connectors from the circuit board.

4. Remove all the screws holding the board to the chassis or other mounting surface.

5. Remove the screws holding the plastic plug-in guide to the top and bottom frame sections.

6. Remove the board from the unit and from the plastic guide. Do not force or bend the board.

7. To replace the board, reverse the order of removal.

Switch Replacement

Two types of switches are used in the 7D14, pushbutton and rotary. If a switch is defective, it must be replaced as a unit. Observe normal soldering precautions when replacing these switches. See the information under Light-Bulb Replacement for instructions on replacing the light bulbs. Illustrations of the pushbutton switches and the wiring color code are given on the backs of pull-out pages in the Diagrams section. Use the following procedures to replace a front-panel switch:

A Pushbutton Switch Replacement

1. Remove the knobs from the LEVEL/SLOPE, INPUT SENS, and DISPLAY TIME control shafts. Use a 1/16-inch hex-key wrench.

2. Remove the front panel from the instrument.

3. Disconnect the associated multi-pin connector(s) from the circuit board.

4. Remove the defective unit.

5. Disconnect the wires from the switch circuit board.

6. To replace, reverse the order of removal.

B Rotary Switch Replacement

1. Before replacing the defective unit, draw a sketch of the terminals showing the wire color code to each terminal.

2. Disconnect the wires from the terminals.

3. Remove the knob from the control shaft. Use a 1/16-inch hex-key wrench.

4. Remove the defective unit from the instrument.

5. To replace, reverse the order of removal.

CAUTION

When disconnecting or connecting leads to a wafer-type rotary switch, do not let solder flow around and beyond the rivet on the switch terminal. Excessive solder can destroy the spring tension of the contact.

Light-Bulb Replacement

The pushbutton switches contain one or more incandescent light bulb. To replace a defective light bulb, use the following procedure:

1. Remove the switch from the instrument as instructed under Switch Replacement. It is not necessary to remove the wires from the switch circuit board.

2. Clip off the bulb leads near the bulb body.

3. Remove the defective bulb from the plastic holder.

4. Remove the leads from the circuit board. Use a 15-watt pencil-type soldering iron.

5. Remove the excess solder from the circuit board with a vacuum-type desoldering tool.

6. Install the replacement bulb so the bulb is centered in the plastic holder.

7. Solder the leads to the circuit board.

8. Replace the switch in the instrument.

Transistor and Integrated Circuit Replacement

Transistors and IC's should not be replaced unless they are actually defective. If removed from their sockets during routing maintenance, return them to their original sockets. Special care must be given to integrated circuit leads, because they can easily be damaged in removal from sockets. Unnecessary replacement or switching of components may affect the calibration of the instrument. When a transistor is replaced, check the operation of the part of the instrument that may be affected.

Recalibration After Repair

After any electrical component has been replaced, the calibration of that particular circuit should be checked, as well as the calibration of other closely related circuits. The Performance Check instructions given in Part I of Section 5 provide a quick and convenient means of checking the instrument operation. The Adjustment procedure in Part II of Section 5 can then be used to adjust the operation to meet the Performance Requirements listed in Section 1.

SECTION 5
CALIBRATION

Change information, if any, affecting this section will be found at the rear of this manual.

Recalibration Interval

To assure instrument accuracy, check the calibration of the 7D14 every 1000 hours of operation, or every six months if used infrequently. Before complete calibration, thoroughly clean and inspect this instrument as outlined in the Maintenance section.

Tektronix Field Service

Tektronix, Inc. provides complete instrument repair and recalibration at local Field Service Centers and the Factory Service Center. Contact your local Tektronix Field Office or representative for further information.

Using This Procedure

General. This section provides several features to facilitate checking or adjusting the 7D14. These are:

Index. To aid in locating a step in the Performance Check or Adjustment procedure, an index is given preceding Part I — Performance Check and Part II — Adjustment procedure.

Performance Check. The performance of this instrument can be checked without removing the side shields or making internal adjustments by performing only Part I — Performance Check. This procedure checks the instrument against the tolerances listed in the Performance Requirement column of Section 1. In addition, a cross-reference is provided to the step in Part II — Adjustment, which will return the instrument to correct calibration. In most cases, the adjustment step can be performed without changing control settings or equipment connections.

Adjustment Procedure. To return this instrument to correct calibration with the minimum number of steps, perform only Part II — Adjustment. The Adjustment procedure gives the recommended calibration procedure for all circuits in this instrument.

Partial Procedure. A partial check or adjustment is often desirable after replacing components or to touch up the adjustment of a portion of the instrument between major recalibrations. To check or adjust only part of the instrument, start with the nearest Equipment Required list preceding the desired portion. To prevent unnecessary recalibration of other parts of the instrument, readjust only if the tolerance given in the CHECK– part of the step is not met. If re-adjustment is necessary, also check the calibration of any steps listed in the INTERACTION– part of the step.

Complete Performance Check/Adjustment. To completely check and adjust all parts of this instrument, perform both Parts I and II. Start the complete procedure by performing the Adjustment procedure for a portion of the instrument (e.g., Channel A Adjustments) and follow this with the Performance Check for the same portion (e.g., Channel A Checks). This method will assure that the instrument is both correctly adjusted and performing within all Performance Requirements as given in Section 1.

TEST EQUIPMENT REQUIRED

General

The following test equipment and accessories, or its equivalent, is required for complete calibration of the 7D14. Specifications given for the test equipment are the minimum necessary for accurate calibration. Therefore, some of the specifications listed here may be somewhat less precise than the actual performance capabilities of the test equipment. All test equipment is assumed to be correctly calibrated and operating within the listed specifications.

The Performance Check and Adjustment procedures are based on this recommended equipment. If other equipment is substituted, control settings or calibration setup may need to be altered to meet the requirements of the equipment used. Detailed operating instructions for the test equipment are not given in this procedure. Refer to the instruction manual for the test equipment if more information is needed.

Calibration Equipment Alternatives

All of the test equipment is required to completely check and adjust this instrument. However, some of the items used only for the Performance Check can be deleted without compromising the instrument's measurement capabilities. For example, the pulse generator is used only in the Performance Check and may be deleted if the user does not desire to check the performance of the External Gate or External Reset functions. Equipment used only for

the Performance Check procedure is indicated by note[1]; items required only for the Adjustment procedure are indicated by note[2].

Test Equipment

1. 7000-series oscilloscope equipped with a readout system, referred to as the Indicator Oscilloscope in this procedure. For example, a Tektronix 7504 Oscilloscope.

2. Amplifier plug-in unit, Tektronix 7A16.

3. Time-Base plug-in unit, Tektronix 7B70.

4. Frequency standard. Any frequency standard calibrated to the National Bureau of Standards transmissions. Frequency, one megahertz; accuracy, within 0.05 part per million; long term drift, one part or less in 10^8 per month.

5. High-frequency constant-amplitude sine-wave generator. Frequency, variable from 120 to 500 megahertz; reference frequency, three megahertz; output amplitude, variable from 50 millivolts to 4.5 volts; amplitude accuracy, within 3% at three megahertz and within 5% at 500 megahertz. For example, Tektronix calibration fixture 067-0532-01.

6. Medium-frequency constant-amplitude sine-wave generator. Frequency, variable from 3.6 to 8.0 megahertz; reference frequency, 50 kilohertz; output amplitude, variable from 0.5 volt to five volts peak to peak into 50 ohms; amplitude accuracy, output amplitude constant within 3% at 50 kilohertz and from 3.6 to 8.0 megahertz. For example, Tektronix Type 191 Constant Amplitude Signal Generator.

7. Low-frequency constant-amplitude signal generator.[1] Frequency range, two hertz to two megahertz; amplitude, 0.5 volt to five volts peak to peak; amplitude accuracy, constant within 3% as output frequency changes. For example, General Radio Model 1310-B Oscillator.

8. Pulse Generator.[1] Pulse period, 700 nanoseconds (ns); pulse width, variable from 200 ns to 500 ns; maximum risetime and falltime, 500 ns; trigger, internal or manual; output amplitude, variable from two to three volts. For example, Tektronix Type 115 Pulse Generator.

9. Time-Mark Generator.[1] Marker outputs, one millisecond to one second; sine-wave output, two nanaoseconds; trigger output, one microsecond; marker accuracy, within 0.1%. For example, Tektronix Type 2901 Time-Mark Generator.

10. Square-Wave Generator. Frequency, one kilohertz; output amplitude, variable from zero to 500 millivolts into 50 ohms. For example, Tektronix Type 106 Square-Wave Generator.

11. Digital Voltmeter.[2] Range, zero to 10 volts; input impedance, 10 megohms or greater; accuracy, within 0.1%. For example, Tektronix 7D13 Digital Multimeter Plug-In Unit.

12. Flexible Plug-In Extender.[2] Tektronix Part Number 067-0616-00.

13. Probe, 10X attenuation.[2] Tektronix P6053.

Accessories

14. BNC T connector.[1] Tektronix Part No. 103-0030-00.

15. In line termination (two each).[1] Impedance, 50 ohms; accuracy, ±2%; connectors, BNC. Tektronix Part No. 011-0049-01.

16. In-line termination. Impedance, 50 ohms; wattage rating, two watts; accuracy, ±2%; connectors, GR874 input with BNC male output. Tektronix Part No. 017-0083-00.

17. Adapter. Adapts GR874 connector to BNC male connector. Tektronix Part No. 017-0064-00.

18. Adapter.[1] Adapts BSM male connector to BNC female connector. Tektronix Part No. 103-0036-00.

19. Attenuator. Impedance, 50 ohms; attenuation ratio, 10X; connectors, GR. Tektronix Part No. 017-0078-00.

20. Attenuator.[2] Impedance, 50 ohms; attenuation ratio, 2X; connectors, GR. Tektronix Part No. 017-0080-00.

21. Cable (two each).[1] Impedance, 50 ohms; type, RG-58/U; length, 42 inches; connectors, BNC. Tektronix Part No. 012-0057-01.

[1] Used only for Performance Check procedure.

[2] Used only for Adjustment procedure.

22. Cable.[1] Impedance, 50 ohms; type, RG-58/U; length, 18 inches; connectors, BNC. Tektronix Part No. 012-0076-00.

23. Cable. Impedance, 50 ohms; type, RG-213/U; length, five nanoseconds; connectors, GR. Tektronix Part No. 017-0512-00.

24. Cable. Pin-jack.[1] Tektronix Part No. 175-1178-00.

Adjustment Tools

25. Screwdriver.[2] Three-inch shaft; 3/32-inch wide bit for slotted screws. For example, Xcelite R3323.

26. Tuning tool.[2] Handle for 003-0310-00 and 003-0334-00 inserts. Tektronix Parts No. 003-0307-00.

27. Tuning-tool insert.[2] For variable capacitors. Tektronix Part No. 003-0334-00.

28. Tuning-tool insert.[2] For 5/64-inch (ID) hex cores. Tektronix Part No. 003-0310-00.

Preliminary Control Settings

Set the controls as follows (for both Performance Check and Adjustment procedure):

Indicator Oscilloscope

A Intensity	Midrange
Focus	Adjust for well-defined display
B Intensity	Counterclockwise
Readout	Midrange
Control Illum	As desired
Grat Illum	As desired
Calibrator	0.4 V
Rate	1 kHz
Vertical Mode	Right
Horizontal Mode	A
A Trigger Source	Right Vert
B Trigger Source	Right Vert

7D14

MEASUREMENT INTERVAL	100 ms
DISPLAY TIME	0.1 s
REF FREQ/CH B	INT 1 MHz
TRIGGER	PRESET
LEVEL/SLOPE	Centered on positive slope
INPUT SENS	1 MΩ/100 mV
BW	500 MHz
COUPLING	DC

Any controls not mentioned can be set as desired.

PART I—PERFORMANCE CHECK

Introduction

The following procedure checks the performance of the 7D14 without removing the side shields or making internal adjustments. All tolerances given in this procedure are based on Section 1 of this manual.

Index to Part I — Performance Check

Channel A Checks

1. Check CH A INPUT Frequency Range — Page 5-5
2. Check CH A INPUT 50 Ω Sensitivity and Low-Frequency Range (AC-COUPLING) — 5-5
3. Check CH A INPUT 1 MΩ Sensitivity and Low-Frequency Range — 5-6
4. Check TRIG SOURCE Sensitivity — 5-6
5. Check BW—5 MHz — 5-6
6. Check Trigger LEVEL Range and SLOPE Selection — 5-7

Measurement Interval Checks

7. Check Crystal Oscillator Accuracy — Page 5-8
8. Check Internal Gate Range — 5-8
9. Check Channel B Frequency Range and Sensitivity — 5-9
10. Check External Gate — 5-9
11. Check Manual Gate — 5-10
12. Check External Reset — 5-10

Output Signals Checks

13. Check INT 1 MHz Output — Page 5-11
14. Check Internal Gate Time Mark Output — 5-11
15. Check Trigger Indicator — 5-11

Preliminary Procedure for Performance Check

NOTE

The performance of this instrument can be checked at any temperature within the 0°C to +50°C range unless stated otherwise.

1. Install the 7D14 in the B horizontal plug-in compartment of the Indicator Oscilloscope.

2. Connect the Indicator Oscilloscope to a power source which meets the frequency and voltage requirements of the oscilloscope power supply.

3. Turn the Indicator Oscilloscope power on. Allow at least twenty minutes warmup for checking the 7D14 to the given accuracy.

4. Set the controls as given under Preliminary Control settings.

5. Advance the Indicator Oscilloscope Readout control to obtain a usable readout display. Adjust the Focus and Astigmatism controls as necessary for well-defined characters in the display.

CHANNEL A CHECK

Equipment Required

1. Indicator Oscilloscope
2. Amplifier unit
3. Time-base unit
4. High-frequency constant-amplitude sine-wave generator
5. Medium-frequency constant-amplitude sine-wave generator
6. Low-frequency constant-amplitude sine-wave generator
7. GR 50-ohm in-line termination
8. GR to BNC male adapter
9. 5-nanosecond GR cable
10. 42-inch BNC cable
11. 18-inch BNC cable
12. BNC T connector
13. GR 10X attenuator

Control Settings

Set the controls as given under Preliminary Control Settings.

NOTE

In steps one through four, the exact reading obtained depends on the accuracy of the generator dial setting.

1. Check CH A INPUT Frequency Range

a. Connect the high-frequency constant-amplitude sine-wave generator to the amplifier unit input through the five-nanosecond GR cable, 10X GR attenuator, and 50-ohm in-line termination, in given order.

b. Set the amplifier unit for a vertical deflection factor of 50 millivolts/division.

c. Set the high-frequency generator for a two-division (100 mV) display at the 3-MHz reference frequency.

d. Disconnect the 50-ohm in-line termination from the amplifier unit input, and reconnect it to the CH A INPUT connector.

e. Set the high-frequency generator for a 500-MHz output.

f. CHECK—The readout display should show a steady count of about 500.00000 MHz. Change the dial setting if necessary to obtain a count of at least 500 MHz.

NOTE

This procedure checks the 7D14 frequency range to 500 MHz. To check the frequency range to the maximum limit as given under Performance Requirement in Section 1, use a constant-amplitude generator with at least a 525-MHz output.

g. Set the INPUT SENS switch to 50 Ω/100 mV.

h. Replace the 50-ohm in-line termination on the high-frequency generator output with a GR to BNC male adapter, and reconnect the generator to the CH A INPUT connector.

i. CHECK—The readout display for the same count obtained in part f of this step (at least 500 MHz).

j. Disconnect all test equipment.

2. Check CH A INPUT 50 Ω Sensitivity and Low-Frequency Range (AC-COUPLING)

a. Change the following control settings:

7D14	
INPUT SENS	50 Ω/1 V
MEASUREMENT INTERVAL	1 s

b. Connect the low-frequency constant-amplitude generator to the amplifier unit input connector through the 42-inch BNC cable and BNC T connector. Connect the output

of the BNC T connector to the CH A INPUT through the 18-inch BNC cable.

c. Set the amplifier unit for a vertical deflection factor of .2 volts/division.

d. Set the low-frequency generator for a five-division display (1 volt) at 200 kHz.

e. CHECK–Readout display for a steady count at about 200 kHz.

f. Press the COUPLING switch AC button.

g. CHECK–Readout display for the same count obtained in part e of this step.

h. Set the low-frequency generator for a five-division display (1 volt) at 10 kHz.

i. CHECK–Readout display for zero count (0.000 to 0.001 kHz).

3. Check CH A INPUT 1 MΩ Sensitivity and Low-Frequency Range

a. Change the following control settings:

7D14

INPUT SENS	1 MΩ/1 V
COUPLING	DC

b. CHECK–Readout display for a steady count at about 10 kHz.

c. Set the INPUT SENS switch to 1 MΩ/10 V and the amplifier unit for a vertical deflection factor of 2 volts/division.

d. Set the low-frequency generator for a five-division display (10 volts) at 10 kHz.

e. CHECK–Readout display for a steady count at about 10 kHz.

f. Set the low-frequency generator for a five-division display (10 volts) at 5 Hz.

g. Press the COUPLING switch AC button.

h. CHECK–Readout display for a steady count at about 5 Hz (0.005 kHz).

i. Set the low-frequency generator for a five-division display (10 volts) at 2 Hz.

j. CHECK–Readout display for zero count (0.000 kHz to 0.0001 kHz).

4. Check TRIG SOURCE Sensitivity

a. Change the following control settings:

7D14

INPUT SENS	TRIG SOURCE
COUPLING	DC

b. Set the low-frequency generator for a 1.5-division display (3 volts) at 10 kHz.

c. CHECK–Readout display for a steady count at about 10 kHz.

d. Disconnect all test equipment.

5. Check BW–5 MHz

a. Install the 7D14 in the left vertical plug-in compartment of the Indicator Oscilloscope.

b. Change the following control settings:

Indicator Oscilloscope

Vertical Mode	Chop

7D14

INPUT SENS	50 Ω/100 mV
BW	5 MHz

c. Connect the medium-frequency constant-amplitude generator to the CH A INPUT connector through the five-nanosecond GR cable, GR to BNC male adapter, and BNC T connector. Connect the output of the BNC T connector to the amplifier unit input through the 18-inch BNC cable.

d. Set the amplifier unit for a vertical deflection factor of 20 millivolts/division.

e. Set the medium-frequency generator for a five-division (100 millivolts) display at the 50-kHz reference frequency.

f. Set the time-base unit for a sweep rate of 10 μs/division and observe the Trigger Indicator square-wave display.

g. Set the generator for an output of 3.5 MHz.

h. Increase the output frequency of the generator until the Trigger Indicator display amplitude becomes zero (a straight line).

i. CHECK—Output frequency of generator must be 5 MHz ±1 MHz.

j. Disconnect all test equipment.

6. Check TRIGGER LEVEL Range and SLOPE Selection

a. Change the following control settings:

	7D14
COUPLING	AC
TRIGGER	VAR
LEVEL/SLOPE	Centered on positive slope (left of center)

b. Connect the medium-frequency constant-amplitude generator to the CH A INPUT through the five-nanosecond GR cable, GR to BNC male adapter, and BNC T connector. Connect the output of the BNC T connector to the amplifier unit input through the 18-inch BNC cable.

c. Set the amplifier unit for a vertical deflection factor of .2 volt/division.

d. Set the generator for a five-division display (1 volt) of a 50-kHz signal.

e. Set the time-base unit for a sweep rate of 20 μs/division.

f. Set the time-base unit to trigger at the center of the positive-slope region.

g. Rotate the 7D14 LEVEL/SLOPE control throughout the positive-slope range from the 6:00 o'clock to 12:00 o'clock positions while observing the Trigger Indicator and sine-wave generator displays.

h. CHECK—Trigger Indicator and sine-wave generator waveforms are in phase with one another (both waveforms start on the positive-going slope), and the Trigger Indicator display amplitude becomes zero (straight line) before the LEVEL/SLOPE control reaches either extreme of rotation.

i. Rotate the 7D14 LEVEL/SLOPE control throughout the negative-slope range from the 6:00 o'clock to 12:00 o'clock positions while observing the Trigger Indicator and sine-wave generator displays.

j. CHECK—Trigger Indicator and sine-wave generator waveforms are out of phase (sine-wave generator waveform starts on the positive slope and Trigger Indicator waveform starts on the negative slope), and the Trigger Indicator display amplitude becomes zero (straight line) before the LEVEL/SLOPE control reaches either extreme of rotation.

k. Disconnect all test equipment.

MEASUREMENT INTERVAL CHECK

Equipment Required

1. Indicator Oscilloscope
2. Amplifier unit
3. Time-base unit
4. Frequency standard
5. Low-frequency constant-amplitude sine-wave generator
6. Time-mark generator
7. Pulse generator
8. 42-inch BNC cable (two required)
9. 18-inch BNC cable
10. 50-ohm BNC in-line termination (two required)
11. BSM to BNC female adapter
12. Pin-jack cable
13. BNC T connector

Control Settings

Set the controls as given under Preliminary Control Settings.

7. Check Internal Crystal Oscillator Accuracy

a. Connect the 7D14 REF FREQ/CH B MONITOR connector to the amplifier unit input through the BSM to BNC female adapter, 18-inch BNC cable, and 50-ohm BNC termination.

b. Connect the marker output of the time-mark generator to the Indicator Oscilloscope high-sensitivity Z-axis input through the 42-inch BNC cable and 50-ohm BNC termination.

c. Set the time-mark generator for one-second markers.

d. Connect the frequency standard one-megahertz output to the time-base unit external trigger input connector.

e. Set the time-base unit for a sweep rate of .5 μs/division externally triggered on the frequency-standard signal.

f. Set the Indicator Oscilloscope intensity control as necessary to observe the one-second intensity modulation of the CRT display.

g. CHECK–CRT display; the movement of the INT 1 MHz markers across the CRT should not exceed one division in one second.

h. CALIBRATION–See step 6 of the Adjustment procedure.

i. Disconnect all test equipment.

8. Check Internal Gate Range

a. Change the following control settings:

	7D14
MEASUREMENT INTERVAL	1 ms
REF FREQ/CH B	EXT IN
INPUT SENS	50 Ω/1 V
COUPLING	AC

b. Connect the marker output of the time-mark generator to the 7D14 CH A INPUT through the 42-inch BNC cable.

c. Connect the trigger output of the time-mark generator to the REF-FREQ/CH B EXT IN connector through the 42-inch BNC cable, 50-ohm BNC termination, and BSM to BNC female adapter, in given order.

d. Set the time-mark generator for two-nanosecond markers and one microsecond triggers.

e. CHECK–Sequentially press the MEASUREMENT INTERVAL 1 ms through 10 s buttons, and check the readout display for a count within the limits given in Table 5-1 for each button pressed.

f. Disconnect all test equipment.

TABLE 5-1

MEASUREMENT INTERVAL	Readout Limits	
	Minimum	Maximum
1 ms	499.999 MHz	500.001 MHz
10 ms	499.9999 MHz	500.0001 MHz
100 ms	499.99999 MHz	500.00001 MHz
1 s	99999.999 kHz	00000.001 kHz
10 s	9999.9999 kHz	0000.0001 kHz

9. Check Channel B Frequency Range and Sensitivity

a. Change the following control settings:

7D14

MEASUREMENT INTERVAL	1 s
INPUT SENS	50 Ω/100 mV
BW	5 MHz

b. Connect the time-mark generator marker output to the 7D14 CH A INPUT through the 42-inch BNC cable.

c. Set the time-mark generator for one-millisecond markers.

d. Connect the low-frequency constant-amplitude generator to the REF FREQ/CH B EXT IN connector through the 42-inch BNC cable, 50-ohm BNC termination, BNC T connector, and BSM to BNC female adapter. Connect the output of the BNC T connector to the amplifier unit input through the 18-inch BNC cable.

e. Set the amplifier unit for a vertical deflection factor of 0.2 volt/division and the time-base unit for a sweep rate of 0.2 μs/division with internal triggering.

f. Set the low-frequency generator for a four-division display at two megahertz.

g. CHECK–The GATE indicator light should blink on and off, and the readout display should show a count of about 0.500 MHz.

h. Change the following control settings:

7D14

MEASUREMENT INTERVAL	1 ms
DISPLAY TIME	∞ (infinite)

i. Set the time-base unit for a sweep rate of 0.5 second/division.

j. Set the low-frequency generator for a four-division display (0.8 volt) at 10 hertz.

k. Press the RESET button to turn off the GATE indicator and reset the readout display to zero count.

l. CHECK–Release the RESET button; the GATE indicator should light and remain on for about one and one-half minutes.

m. CHECK–Readout display for a count of about 100.000 MHz.

n. Disconnect all test equipment.

10. Check External Gate

a. Change the following control settings.

7D14

MEASUREMENT INTERVAL	MANUAL GATE OFF
REF FREQ/CH B	INT 1 MHz
BW	500 MHz
DISPLAY TIME	0.1 s (counterclockwise)

b. Connect the pulse generator (Type 1 output to the amplifier unit input through the 42-inch BNC cable and 50-ohm BNC termination.

c. Set the pulse generator controls as follows:

Period	100 ns
Width	50 ns
Risetime and Falltime	10 ns
Mode	Undly'd Pulse
Trigger	Int
Pulse Polarity	+
DC Offset	Preset
Amplitude	1.0

d. Set the pulse generator variable amplitude control for a three-division display.

e. Set the pulse generator variable period control for a seven-division pulse period.

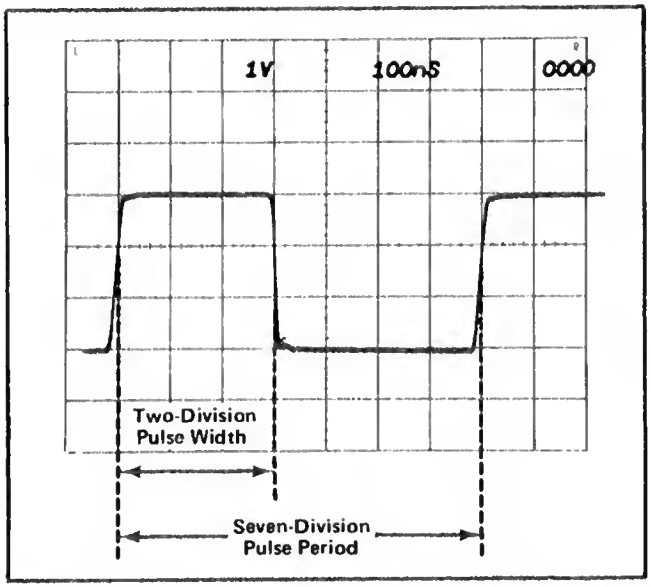

Fig. 5-1. Pulse generator output waveform for checking external gate operation.

f. Set the pulse generator variable width control for a two-division positive-pulse width (measure the pulse width where the positive-pulse amplitude is two divisions, as shown in Fig. 5-1).

g. Disconnect the 50-ohm BNC termination from the amplifier unit input and connect it to the EXT GATE input connector through the BSM to BNC female adapter.

h. Connect the marker output of the time-mark generator to the CH A INPUT through the 42-inch BNC cable.

i. Set the time-mark generator for 2 nanosecond markers.

j. CHECK—Readout display for a count of 0100 ±15 counts (0085 to 0115).

k. Disconnect all test equipment.

11. Check Manual Gate

a. Change the following control settings:

	7D14
DISPLAY TIME	∞ (infinite)

b. Connect the marker output of the time-mark generator to the CH A INPUT through the 42-inch BNC cable, 50-ohm BNC termination, and BNC T connector. Connect the output of the T connector to the amplifier unit input through the 18-inch BNC cable.

c. Set the time-base unit for a sweep rate of two seconds/division.

d. Set the time-mark generator for one-second markers.

e. Momentarily press the RESET button.

f. Press the MANUAL GATE ON button, count ten time marks on the CRT; then press the MANUAL GATE OFF button.

g. CHECK—Readout display for a count of 0010 ±1 count (0009 to 0011).

h. Disconnect all test equipment.

12. Check External Reset

a. Set the time-base unit for a sweep rate of 0.1 μs/division.

b. Connect the pulse generator output to the amplifier unit input through the 42-inch BNC cable and 50-ohm BNC termination.

c. Set the pulse generator output amplitude for a two-division display.

d. Set the pulse generator for a five-division positive pulse width.

e. Set the pulse generator for manual trigger operation.

f. Disconnect the 50-ohm BNC termination from the amplifier unit input and connect it to the RESET pin-jack connector through the pin-jack cable.

g. Momentarily press the pulse generator manual trigger button.

h. CHECK—Readout display for zero count ±1 count (0000 to 0001).

i. Disconnect all test equipment.

OUTPUT SIGNALS CHECKS

Equipment Required

1. Indicator Oscilloscope
2. Amplifier plug-in unit
3. Time-base plug-in unit
4. Medium-frequency constant-amplitude sine-wave generator
5. Five-nanosecond GR cable
6. 50-ohm in-line termination
7. 18-inch BNC cable
8. BNC T connector
9. BSM to BNC male adapter

Control Settings

Set the controls as given under Preliminary Control Settings.

13. Check INT 1 MHz Output

a. Set the amplifier unit for a vertical deflection factor of 1 volt/division and the time-base unit for a sweep rate of 0.5 μs/division.

b. Connect the REF FREQ/CH B MONITOR output to the amplifier unit input through the BSM to BNC female adapter and 18-inch BNC cable.

c. CHECK—CRT display for vertical deflection of five divisions ±0.5 division.

d. Disconnect the cable and adapter.

14. Check Internal Gate Time Mark Output

a. Change the following control settings:

7D14	
MEASUREMENT INTERVAL	1 ms

b. Connect the MEASUREMENT INTERVAL MONITOR output to the amplifier unit input through the BSM to BNC female adapter and 18-inch BNC cable.

c. Set the time-base unit for a sweep rate of 0.2 ms/division.

d. CHECK—CRT display for vertical deflection of five divisions ±0.5 division. Positive gate duration should be about five divisions.

e. Disconnect the cable and adapter.

15. Check Trigger Indicator

a. Change the following control settings:

Indicator Oscilloscope	
Vertical Mode	Chop

b. Set the amplifier unit for a vertical deflection factor of 0.1 volt/division and the time-base unit for a sweep rate of 0.5 ms/division.

c. Connect the medium-frequency constant-amplitude sine-wave generator to the CH A INPUT through the five-nanosecond GR cable, 50-ohm in-line termination, and BNC T connector. Connect the output of the T connector to the amplifier unit input through the 18-inch BNC cable.

d. Set the medium-frequency generator for a four-division display (0.4 volt) at 50 kHz.

e. Center the sine-wave display with the amplifier unit Position control.

f. CHECK—Trigger Indicator display (square wave) for vertical deflection of 0.2 division ±0.05 division.

g. Disconnect all test equipment.

This completes the Performance Check of the 7D14.

PART II—ADJUSTMENT

Introduction

The following procedure returns the 7D14 to correct calibration. All limits and tolerances given in this procedure are calibration guides, and should not be interpreted as instrument specifications except as listed in the Performance Requirement column in Section 1. The actual operation of the instrument may exceed the given limits or tolerances if the instrument meets the Performance Requirements as checked in Part I — Performance Check of this section.

Index of Part II — Adjustment

Channel A Adjustments

1. Adjust Input Zero (R225) Page 5-13

2. Adjust Trigger Preset (R125) 5-13

3. Adjust Low-Frequency Compensation (C132) 5-14

4. Adjust Reference Voltage (R320) 5-14

5. Adjust High-Frequency Compensation (C150) 5-15

Measurement Interval Adjustment

6. Adjust Crystal Oscillator Frequency 5-16

Output Signal Adjustment

7. Adjust Trigger Indicator Display Positioning (R866) 5-17

Preliminary Procedure for Adjustment

NOTE

This instrument should be adjusted at an ambient temperature of 25°C ±5°C for best overall accuracy.

1. Remove the right side shield from the 7D14, and the right side panel from the Indicator Oscilloscope.

2. Install the 7D14 in the B horizontal plug-in compartment of the Indicator Oscilloscope.

3. Connect the Indicator Oscilloscope to a power source which meets the frequency and voltage requirements of the oscilloscope power supply.

4. Turn the Indicator Oscilloscope power on. Allow at least twenty minutes warmup before proceeding.

5. Set the controls as given under Preliminary Control Settings.

6. Advance the Indicator Oscilloscope Readout control to obtain a usable readout display. Adjust the Focus and Astigmatism as necessary to obtain a well-defined display.

NOTE

Titles for external controls of this instrument are capitalized in this procedure (e.g., INPUT SENS). Internal adjustments are initial capitalized only (e.g., Ref Voltage).

CHANNEL A ADJUSTMENTS

Equipment Required

1. Indicator Oscilloscope
2. Amplifier unit
3. Time-base unit
4. Digital voltmeter
5. Square wave generator
6. High-frequency constant-amplitude sine-wave generator
7. Medium-frequency constant-amplitude sine wave generator
8. 10X probe
9. Five-nanosecond GR cable
10. 50-ohm in line termination
11. GR to BNC male adapter
12. 10X GR attenuator
13. 2X GR attenuator
14. Tuning tool and inserts
15. Three-inch screwdriver

Control Settings

Set the controls as given under Preliminary Control Settings.

Location of Adjustments and Test Points

The locations of the Channel A Adjustments and Test Points are shown in Fig. 5-2.

1. Adjust Input Zero

a. Set the INPUT SENS control to 50 Ω/100 mV.

b. Connect the digital voltmeter between test point 118 and chassis ground.

c. CHECK Voltmeter reading; zero volt ±0.001 volt.

d. ADJUST—Zero adjustment R225 for a voltmeter reading of exactly zero volt.

2. Adjust Trigger Preset

a. Change the following control settings:

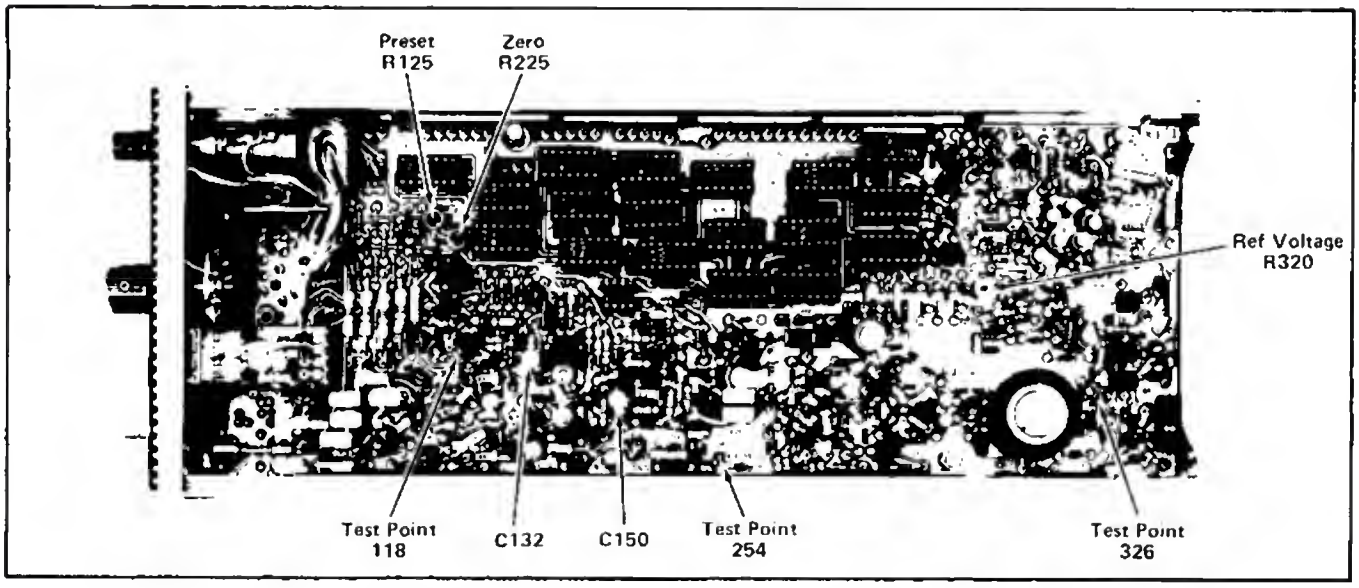

Fig. 5-2. Location of Channel A Adjustments and Test points (on right side of instrument).

Indicator Oscilloscope	
Horizontal Mode	A

b. Set the amplifier unit for a vertical deflection factor of 50 mV/division and the time-base unit for a sweep rate of 0.1 μs/division.

c. Connect the medium-frequency constant-amplitude sine-wave generator to the amplifier unit input through the five-nanosecond GR cable and 50-ohm in-line termination.

d. Set the medium-frequency generator for a three-division display at three megahertz.

e. Disconnect the 50-ohm in-line termination from the amplifier unit input and from the five-nanosecond GR cable. Connect the five-nanosecond GR cable to the CH A INPUT connector through the GR to BNC male adapter.

f. Set the amplifier unit for AC input coupling at a vertical deflection factor of 5 mV/division.

g. Connect the 10X probe to the amplifier unit input.

h. Connect the 10X probe tip to test point 254 and connect the probe ground to chassis ground.

i. Center the CRT display with the amplifier unit position control.

j. CHECK—CRT display for the trigger switching points to be centered on the sine wave as shown in Fig. 5-3.

k. ADJUST—Preset adjustment R125 to center the trigger switching points on the sine-wave display.

l. CHECK—Digital voltmeter reading; zero volt ±0.001 volt.

m. ADJUST—Zero adjustment R225 for a voltmeter reading of exactly zero volt.

n. Repeat parts i and j of this step.

o. Disconnect all test equipment.

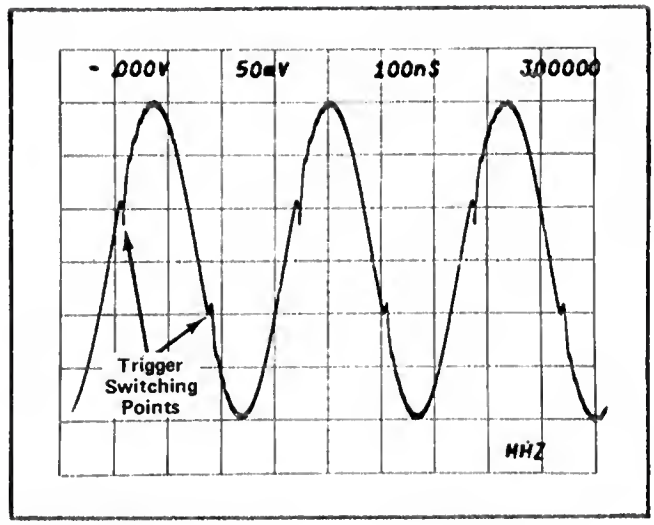

Fig. 5-3. Trigger switching points on sine-wave display.

3. Adjust Low-Frequency Compensation

a. Set the time-base unit for a sweep rate of 0.2 ms/division. Set the time-base unit to trigger at the center of the negative-slope region.

b. Connect the 10X probe to the amplifier unit input.

c. Connect the probe tip to test point 254 and connect the probe ground to chassis ground.

d. Connect the square-wave generator +output to the CH A INPUT through the five-nanosecond GR cable and GR to BNC male adapter.

e. Set the square-wave generator for a five-division display at one kilohertz.

f. CHECK—CRT display; overshoot on square-wave display should not exceed 0.25 division.

g. ADJUST—C132 for optimum square wave with overshoot not exceeding 0.25 division.

h. Disconnect all test equipment.

4. Adjust Reference Voltage

a. Change the following control settings:

	7D14
MEASUREMENT INTERVAL	1 ms

b. Set the amplifier unit for a vertical deflection factor of 50 mV/division.

c. Connect the high-frequency constant-amplitude sine-wave generator to the amplifier unit input through the five-nanosecond GR cable, 10X GR attenuator, and 50-ohm in-line termination.

d. Set the high-frequency generator for a two-division display at the 3-MHz reference frequency.

e. Disconnect the high-frequency generator from the amplifier unit input.

f. Connect the generator to the CH A INPUT through the five-nanosecond GR cable, 10X GR attenuator, and GR to BNC male adapter.

g. Set the high-frequency generator for a 120-megahertz output.

h. CHECK—Readout display for a steady count of about 120 MHz.

i. Connect the digital voltmeter between test point 326 and chassis ground.

j. Adjust the Ref Voltage adjustment R320 as far clockwise as possible without significantly changing the 120-MHz count; note the voltmeter reading.

k. Adjust the Ref Voltage adjustment R320 as far counterclockwise as possible without significantly changing the 120-MHz count; note the voltmeter reading.

l. ADJUST—Ref Voltage adjustment R320 for a voltmeter reading halfway between the readings obtained in parts i and j of this step. For example, if the upper voltmeter reading is −3.70 volts and the lower voltmeter reading is −2.90 volts, the difference between the two is −0.80 volt. Adjust R320 for the lower reading plus one-half the difference or −3.30 volts.

m. Disconnect all test equipment.

5. Adjust High-Frequency Compensation

a. Set the amplifier unit for a vertical deflection factor of 10 mV/division.

b. Connect the high-frequency generator to the amplifier unit input through the five-nanosecond GR cable, 10X GR attenuator, 2X GR attenuator, and 50-ohm in-line termination.

c. Set the high-frequency generator for a five-division (50 millivolts) display at the 3-MHz reference frequency.

d. Disconnect the generator from the amplifier unit input.

e. Connect the generator to the CH A INPUT through the five-nanosecond GR cable, 10X GR attenuator, 2X GR attenuator, and GR to BNC male adapter.

f. Set the generator for a 500-MHz output.

g. Check—Readout display for a count of about 500 MHz.

h. ADJUST—C150 for a 500-MHz count.

i. Disconnect all test equipment.

j. Replace the Indicator oscilloscope right cover.

MEASUREMENT INTERVAL ADJUSTMENT

Equipment Required

1. Indicator oscilloscope
2. Flexible plug-in extender
3. Frequency standard
4. Tuning tool

Control Settings

Set the controls as given under Preliminary Control Settings.

The location of the Measurement Interval adjustment is shown in Fig. 5-4.

6. Adjust Crystal Oscillator Frequency

NOTE

The oscillator frequency must be adjusted at an ambient room temperature of about +25° C according to the following procedure to ensure operation within the limits given in Section 1 for an operating temperature range of 0 C to +50 C.

a. Remove the 7D14 from the Indicator Oscilloscope.

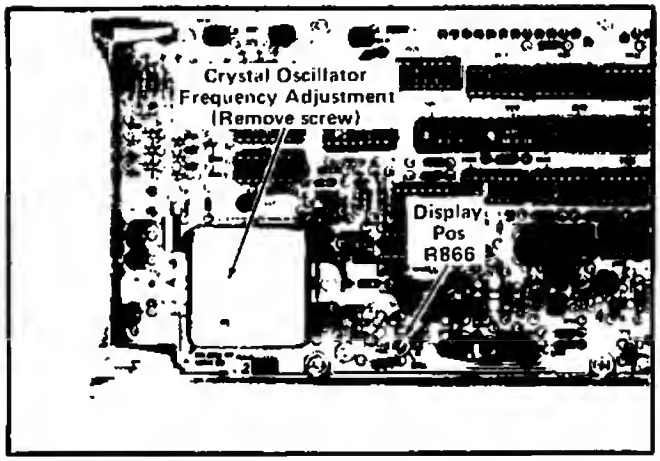

Fig. 5-4. Location of Measurement Interval and Output Signal Adjustments (on left side of instrument).

b. Replace the right side shield on the unit and remove the left shield.

c. Note the Frequency at 27 C notation on the crystal oscillator cover (see Fig. 5-4).

d. Place the 7D14 on the flexible plug-in extender and plug the extender into the Indicator Oscilloscope.

e. Connect the frequency standard one megahertz output to the CH A INPUT.

f. Press the MEASUREMENT INTERVAL 10 s button and the BW 5 MHz button.

g. Place the 7D14 with the left side on the bench so the crystal oscillator is facing downward. Allow the unit to warm up in this position for about 15 minutes.

h. CHECK—Readout display for a count of 1000.0000 kHz ± one-fifth of the 5.0 MHz error indicated on the oscillator cover ±1 count. For example, for an oscillator Freq at 27 C of 5.0 MHz +1.0 Hz, a count of 1000.0000 kHz minus 0.2 Hz ±1 count (999.9998 kHz ±1 count) should be obtained. If the 5.0 MHz error were −1.0 Hz, 0.2 Hz would be added to the count (1000.0002 kHz ±1 count).

i. ADJUST—Crystal oscillator frequency adjustment for a displayed count as given in part g of this step. To gain access to the oscillator frequency adjustment, remove the screw in the oscillator cover. The adjustment is made with the tuning tool.

j. Disconnect all test equipment.

k. Remove the 7D14 from the plug-in extender. Replace the left side shield on the unit.

OUTPUT SIGNAL ADJUSTMENT

Equipment Required

1. Indicator Oscilloscope
2. Amplifier plug in unit
3. Time-base plug in unit
4. Medium-frequency constant amplitude sine-wave generator
5. Five-nanosecond GR cable
6. 50 ohm in-line termination
7. GR to BNC male adapter
8. Three-inch screwdriver

Control Settings

Set the controls as given under Preliminary Control Settings.

The location of the Output Signal adjustment is shown in Fig. 5-4.

7. Adjust Trigger Indicator Display Positioning

a. Install the 7D14 in the left vertical plug in compartment of the Indicator Oscilloscope.

b. Remove the left side cover from the indicator Oscilloscope.

c. Set the amplifier unit for a vertical deflection factor of 50 mV/division and the time-base unit for a sweep rate of 10 μs/division.

d. Connect the medium frequency constant-amplitude sine wave generator to the amplifier unit input through the five-nanosecond GR cable and 50-ohm in-line termination.

e. Set the medium frequency generator for a three division display (150 millivolts) at the 50-kilohertz reference frequency.

f. Disconnect the generator from the amplifier unit input.

g. Connect the medium-frequency generator to the CH A INPUT through the five nanosecond GR cable and GR to BNC male adapter.

h. Change the following control settings:

Indicator Oscilloscope

Vertical Mode	Left
A Trigger Source	Left Vert

i. CHECK—CRT display, the Trigger Indicator square-wave display should be positioned in the CRT viewing area.

j. ADJUST Display Positioning adjustment R866 to vertically position the Trigger Indicator display in the desired area of the CRT.

This completes the Adjustment procedure of the 7D14. Disconnect all test equipment. Replace the left side cover on the Indicator Oscilloscope.

PARTS LIST ABBREVIATIONS

BHB	binding head brass
BHS	binding head steel
cap.	capacitor
cer	ceramic
comp	compositian
conn	connectar
CRT	cathade-ray tube
csk	countersunk
DE	double end
dia	diameter
div	division
elect.	electrolytic
EMC	electralytic, metal cased
EMT	electrolytic, metal tubular
ext	external
F & I	focus and intensity
FHB	flat head brass
FHS	flat head steel
Fil HB	fillister head brass
Fil HS	fillister head steel
h	height ar high
hex.	hexaganal
HHB	hex head brass
HHS	hex head steel
HSB	hex socket brass
HSS	hex socket steel
ID	inside diameter
inc	incandescent
int	internal
lg	length or long
met.	metal
mtg hdw	maunting hardware
OD	autside diameter
OHB	oval head brass
OHS	oval head steel
P/O	part of
PHB	pan head brass
PHS	pan head steel
plstc	plastic
PMC	paper, metal cased
poly	palystyrene
prec	precisian
PT	paper, tubular
PTM	paper ar plastic, tubular, molded
RHB	raund head brass
RHS	raund head steel
SE	single end
SN or S/N	serial number
S ar SW	switch
TC	temperature compensated
THB	truss head brass
thk	thick
THS	truss head steel
tub.	tubular
var	variable
w	wide or width
WW	wire-wound

PARTS ORDERING INFORMATION

Replacement parts ore ovoiloble from or through your local Tektronix, Inc. Field Office or representative.

Changes to Tektronix instruments are sometimes made to accommodate improved components as they become availoble, and to give you the benefit of the lotest circuit improvements developed in our engineering deportment. It is therefore important, when ordering parts, to include the following informotion in your order: Port number, instrument type or number, serial or model number, and modification number if applicoble.

If a part you have ordered has been reploced with o new or improved part, your locol Tektronix, Inc. Field Office or representative will contact you concerning any chonge in port number.

SPECIAL NOTES AND SYMBOLS

X000	Port first odded at this serial number
00X	Part removed after this seriol number
*000-0000-00	Asterisk preceding Tektronix Part Number indicates manufactured by or for Tektronix, Inc., or reworked or checked components.
Use 000-0000-00	Port number indicated is direct replacement.

INDEX OF ELECTRICAL PARTS LIST

Title	Page No.
CHASSIS	6-1
A1 HIGH FREQ COUNTER Circuit Board Assembly	6-1
A2 LOGIC Circuit Board Assembly	6-12
A3 TRIGGER SWITCH Circuit Board Assembly	6-21
A4 BANDWIDTH SWITCH Circuit Board Assembly	6-21
A5 COUPLING SWITCH Circuit Board Assembly	6-21
A6 REF FREQ SWITCH Circuit Board Assembly	6-22
A7 INTERVAL SWITCH Circuit Board Assembly	6-22

SECTION 6
ELECTRICAL PARTS LIST

Values are fixed unless marked Variable.

Ckt. No.	Tektronix Part No.	Serial/Model No. Eff	Disc	Description

CHASSIS

Bulb

DS80	150-0109-00		Incandescent, 18 V, 26 mA

Connectors

J1	131-0818-00		8NC, receptacle, electrical, female
J50	131-0282-00		Bulkhead, receptacle w/single center cantact
J60	131-0282-00		Bulkhead, receptacle w/single center cantact
J62	136-0387-00		Socket, pin term.

Resistors

Resistors are fixed, composition, ±10% unless otherwise indicated.

R22[1]	311-0991-00		125 kΩ, Var
R70	311-1114-00		2.5 MΩ, Var

Switch

	Wired or Unwired			
S10	260-1219-00		Rotary	INPUT SENS

A1 HIGH FREQ COUNTER Circuit Board Assembly

*670-0993-00 Complete Board

Capacitors

Talerance ±20% unless atherwise indicated.

C1	283-0187-00	0.047 μF	Cer	400 V	10%
C100	283-0000-00	0.001 μF	Cer	500 V	
C101	281-0653-00	3.3 pF	Cer	200 V	±1 pF
C102	281-0619-00	1.2 pF	Cer	200 V	
C103	281-0619-00	1.2 pF	Cer	200 V	

[1]Includes 311-0911-00 125 kΩ, Var resistor.

A1 HIGH FREQ COUNTER Circuit Board Assembly (cont)

Ckt. No.	Tektronix Part No.	Serial/Model No. Eff	Disc	Description			
				Capacitors (cont)			
C105	281-0659-00			4.3 pF	Cer	500 V	±0.25 pF
C112	281-0653-00			3.3 pF	Cer	200 V	±1 pF
C118	283-0177-00			1 μF	Cer	25 V	+80%—20%
C119	283-0000-00			0.001 μF	Cer	500 V	
C127	283-0000-00			0.001 μF	Cer	500 V	
C131	281-0613-00			10 pF	Cer	200 V	10%
C132	281-0151-00			1-3 pF, Var	Cer	100 V	
C142	281-0616-00			6.8 pF	Cer	200 V	
C150	281-0151-00			1-3 pF, Var	Cer		
C151	281-0618-00			4.7 pF	Cer	200 V	±0.5 pF
C170	283-0076-00			27 pF	Cer	500 V	10%
C175	283-0078-00	B010100	B010350X	0.001 μF	Cer	500 V	
C176	283-0219-00	B010100	B010359	1500 pF	Cer	50 V	
C176	283-0184-00	B010360		270 pF	Cer	50 V	
C178	283-0182-00			51 pF	Cer	400 V	5%
C186	283-0003-00			0.01 μF	Cer	150 V	
C195	290-0135-00			15 μF	Elect.	20 V	
C196	290-0135-00			15 μF	Elect.	20 V	
C197	283-0003-00			0.01 μF	Cer	150 V	
C199	290-0135-00			15 μF	Elect.	20 V	
C203	283-0000-00			0.001 μF	Cer	500 V	
C209	283-0000-00			0.001 μF	Cer	500 V	
C210	283-0111-00			0.1 μF	Cer	50 V	
C212	290-0114-00			47 μF	Elect.	6 V	
C214	281-0653-00			3.3 pF	Cer	200 V	±1 pF
C219	281-0609-00			1 pF	Cer	200 V	10%
C220	281-0613-00			10 pF	Cer	200 V	10%
C221	281-0611-00			2.7 pF	Cer	200 V	±0.25 pF
C222	283-0026-00			0.2 μF	Cer	25 V	
C223	283-0000-00			0.001 μF	Cer	500 V	
C230	283-0000-00			0.001 μF	Cer	500 V	
C233	283-0181-00			1.8 pF	Cer	100 V	10%
C242	281-0616-00			6.8 pF	Cer	200 V	
C248	281-0613-00			10 pF	Cer	200 V	10%
C259	283-0003-00			0.01 μF	Cer	150 V	
C276	281-0610-00			2.2 pF	Cer	200 V	±0.1 pF
C295	290-0135-00			15 μF	Elect.	20 V	
C296	290-0135-00			15 μF	Elect.	20 V	
C297	283-0003-00			0.01 μF	Cer	150 V	
C299	283-0003-00			0.01 μF	Cer	150 V	
C309	283-0000-00			0.001 μF	Cer	500 V	
C318	283-0003-00			0.01 μF	Cer	150 V	
C319	283-0003-00			0.01 μF	Cer	150 V	

A1 HIGH FREQ COUNTER Circuit Board Assembly (cont)

Ckt. No.	Tektronix Part No.	Serial/Model No. Eff	Disc	Description			
				Capacitors (cont)			
C326	283-0000-00			0.001 μF	Cer	500 V	
C328	283-0003-00			0.01 μF	Cer	150 V	
C342	281-0612-00			5.6 pF	Cer	200 V	±0.5 pF
C344	281-0611-00	B010100	B010102X	2.7 pF	Cer	200 V	±0.25 pF
C347	283-0000-00			0.001 μF	Cer	500 V	
C348	283-0000-00			0.001 μF	Cer	500 V	
C349	283-0000-00			0.001 μF	Cer	500 V	
C351	283-0103-00			180 pF	Cer	500 V	5%
C358	283-0000-00			0.001 μF	Cer	500 V	
C364	283-0000-00			0.001 μF	Cer	500 V	
C376	283-0000-00			0.001 μF	Cer	500 V	
C384	283-0000-00			0.001 μF	Cer	500 V	
C392	283-0000-00			0.001 μF	Cer	500 V	
C402	283-0000-00			0.001 μF	Cer	500 V	
C414	283-0000-00			0.001 μF	Cer	500 V	
C419	283-0003-00			0.01 μF	Cer	150 V	
C440	283-0003-00			0.01 μF	Cer	150 V	
C446	283-0003-00			0.01 μF	Cer	150 V	
C450	283-0003-00			0.01 μF	Cer	150 V	
C457	283-0003-00			0.01 μF	Cer	150 V	
C463	283-0003-00			0.01 μF	Cer	150 V	
				Semiconductor Device, Diodes			
CR100	*152-0185-00			Silicon		Replaceable by 1N4152	
CR114	*152-0323-00			Silicon		Tek Spec	
CR115	*152-0322-00			Silicon		Tek Spec	
CR116	*152-0322-00			Silicon		Tek Spec	
CR117	*152-0323 00			Silicon		Tek Spec	
CR135	*152-0185-00			Silicon		Replaceable by 1N4152	
CR136	*152-0322-00			Silicon		Tek Spec	
CR152	*152-0185-00			Silicon		Replaceable by 1N4152	
CR154	*152-0185-00			Silicon		Replaceable by 1N4152	
CR164	*152-0185-00			Silicon		Replaceable by 1N4152	
CR165	*152-0185-00			Silicon		Replaceable by 1N4152	
CR173 } CR175 }	*153-0037-00			Silicon		Tek Spec (matched pair)	
CR174	152-0177-01			Tunnel		10 mA	
CR200	*152-0185-00			Silicon		Replaceable by 1N4152	
CR201	*152-0185-00			Silicon		Replaceable by 1N4152	
CR202	*152-0185-00			Silicon		Replaceable by 1N4152	
CR203	*152-0185-00			Silicon		Replaceable by 1N4152	

A1 HIGH FREQ COUNTER Circuit Board Assembly (cont)

Ckt. No.	Tektronix Part No.	Serial/Model No. Eff	Disc	Description
		Semiconductor Device, Diodes (cont)		
CR204	*152-0185-00			Silican — Replaceable by 1N4152
CR205	*152-0185-00			Silicon — Replaceable by 1N4152
CR206	*152-0185-00			Silican — Replaceable by 1N4152
CR207	*152-0185-00			Silican — Replaceable by 1N4152
CR208	*152-0185-00			Silican — Replaceable by 1N4152
CR209	*152-0185-00			Silicon — Replaceable by 1N4152
CR214	*152-0185-00			Silican — Replaceable by 1N4152
CR235	*152-0185-00			Silican — Replaceable by 1N4152
CR236	*152-0322-00			Silican — Tek Spec
CR252	*152-0185-00			Silicon — Replaceable by 1N4152
CR254	*152-0185-00			Silican — Replaceable by 1N4152
CR322	*152-0185-00			Silican — Replaceable by 1N4152
CR323	*152-0185-00			Silican — Replaceable by 1N4152
CR357	*152-0185-00			Silicon — Replaceable by 1N4152
CR411	*152-0322-00			Silican — Tek Spec
CR412	*152-0322-00			Silican — Tek Spec
VR176	152-0279-00			Zener — 1N751A 400 mW, 5.1 V, 5%
VR178	152-0127-00			Zener — 1N755A 400 mW, 7.5 V, 5%
VR210	152-0149-00			Zener — 1N9618 400 mW, 10 V, 5%
VR331, VR335, VR348, VR364, VR376, VR384, VR392, VR402	153-0048-00			Zener — Set of (8) 400 mW, 6.2 V
VR413	152-0278-00			Zener — 1N4372A 400 mW, 3 V, 5%
		Relays		
K100	148-0070-00	B010100	B010189	Armature, plug-in, contacts SPDT
K100	148-0070-01	B010190		Armature, plug-in, contacts SPDT
K101	148-0070-00	B010100	B010189	Armature, plug-in, contacts SPDT
K101	148-0070-01	B010190		Armature, plug-in, contacts SPDT
K103	148-0071-00			Armature, plug-in, contacts DPDT
K106	148-0070-00	B010100	B010189	Armature, plug-in, contacts SPDT
K106	148-0070-01	B010190		Armature, plug-in, contacts SPDT
K152	148-0070-00	B010100	8010189	Armature, plug-in, contacts SPDT
K152	148-0070-01	B010190		Armature, plug-in, contacts SPDT
K252	148-0070-00	B010100	B010189	Armature, plug-in, contacts SPDT
K252	148-0070-01	B010190		Armature, plug-in, contacts SPDT

A1 HIGH FREQ COUNTER Circuit Board Assembly (cont)

Ckt. No.	Tektronix Part No.	Serial/Model No. Eff	Disc	Description
		Inductors		
L134	*108-0440-00			8 μH
L135	108-0538-00			2.7 μH
L138	*108-0440-00			8 μH
L148	*108-0440-00			8 μH
L151	108-0569-00			55 nH
L152	*108-0440-00			8 μH
L192	108-0369-00	8010100	8010359	120 nH
L192	108-0421-00	8010360		60 nH
L195	*108-0440-00			8 μH
L199	*108-0440-00			8 μH
L234	*108-0440-00			8 μH
L235	108-0538-00			2.7 μH
L238	*108-0440-00			8 μH
L251	108-0569-00			55 nH
L295	*108-0440-00			8 μH
L362	276-0569-00	X8010360		Core, toroid ferrite
L374	276-0569-00	X8010360		Core, toroid ferrite
L382	276-0569-00	X8010360		Core, toroid ferrite
L390	276-0569-00	XB010360		Core, toroid ferrite
L400	276-0569-00	X8010360		Core, toroid ferrite
LR108	*108-0407-00			20 nH (Wound on a 51 Ω, 1/8 W, 5% resistor)
LR163	*108-0407-00	8010100	8010102X	20 nH (wound on a 51 Ω, 1/8 W, 5% resistor)
LR169	*108-0407-00			20 nH (wound on a 51 Ω, 1/8 W, 5% resistor)
LR263	*108-0407-00	B010100	B010102X	20 nH (wound on a 51 Ω, 1/8 W, 5% resistor)
LR269	*108-0407-00			20 nH (wound on a 51 Ω, 1/8 W, 5% resistor)
LR279	*108-0407-00			20 nH (wound on a 51 Ω, 1/8 W, 5% resistor)
		Transistors		
Q130	151-1031-00			Silicon FET N channel, junction type
Q132[2]	*153-0589-00			Silicon NPN TO-72 2N5652
Q136	151-0190-00			Silicon NPN TO-92 2N3904
Q141[3]	*153-0589-00			Silicon NPN TO-72 2N5652
Q147	*151-0271-00			Silicon PNP TO-18 Tek Spec
Q152	151-0345-00			Silicon PNP Micro-Tee, very High Freq.
Q154	*151-0294-00			Silicon PNP High Freq. Tek Spec
Q170	*151-0294-00	B010100	B010359	Silicon PNP High Freq. Tek Spec
Q170	*153-0598-00	B010360		Silicon PNP Tek selected
Q180	*151-0294-00	B010100	B010359	Silicon PNP High Freq. Tek Spec
Q180	*153-0598-00	B010360		Silicon PNP Tek selected
Q188	151-0190-00			Silicon NPN TO-92 2N3904
Q190	*151-0212-00			Silicon NPN TO-18 Tek Spec
Q216	*151-0230-00	8010100	8010359	Silicon NPN TO-105 Selected from RCA 40235
Q216	151-0282-00	B010360		Silicon NPN TO-72 2N5179
Q218	*151-0271-00			Silicon PNP TO-18 Tek Spec
Q232[2]	*153-0589-00			Silicon NPN TO-72 2N5652
Q236	151-0190-00			Silicon NPN TO-92 2N3904
Q241[3]	*153-0589-00			Silicon NPN TO-72 2N5652
Q247	*151-0271-00			Silicon PNP TO-18 Tek Spec

[2]Q132 and Q232 furnished as a matched pair.
[3]Q141 and Q241 furnished as a matched pair.

A1 HIGH FREQ COUNTER Circuit Board Assembly (cont)

Ckt. No.	Tektronix Part No.	Serial/Model No. Eff	Disc	Description		
				Transistors (cont)		
Q252	151-0345-00			Silicon	PNP	Micro-Tee, very High Freq.
Q254	*151-0294-00			Silicon	PNP	High Freq. Tek Spec
Q259	151-0220-00			Silicon	PNP	TO-18 2N4122
Q270	*151-0294-00	B010100	B010359	Silicon	PNP	High Freq. Tek Spec
Q270	*153-0598-00	B010360		Silicon	PNP	Tek selected
Q275	151-0345-00			Silicon	PNP	Micro-Tee, very High Freq.
Q278	151-0345-00			Silicon	PNP	Micro-Tee, very High Freq.
Q280	*151-0294-00	B010100	B010359	Silicon	PNP	High Freq. Tek Spec
Q280	*153-0598-00	B010360		Silicon	PNP	Tek selected
Q288	151-0190-00			Silicon	NPN	TO-92 2N3904
Q290	*151-0212-00			Silicon	NPN	TO-18 Tek Spec
Q317	*151-0134-00			Silicon	PNP	TO-5 Reploceable by 2N2905
Q339	151-0190-00			Silicon	NPN	TO-92 2N3904
Q341	151-0282-00			Silicon	NPN	TO-72 2N5179
Q345	151-02B2-00			Silicon	NPN	TO-72 2N5179
Q353	151-0190-00			Silicon	NPN	TO-92 2N3904
Q356	151-0220-00			Silicon	PNP	TO-18 2N4122
Q359	151-0190-00			Silicon	NPN	TO-92 2N3904
Q362	*151-0230-00	B010100	B010359	Silicon	NPN	TO-105 Selected from RCA 40235
Q362	151-0282-00	B010360		Silicon	NPN	TO-72 2N5179
Q364	*151-0230-00	B010100	B010359	Silicon	NPN	TO-105 Selected from RCA 40235
Q364	*151-0259-00	B010360		Silicon	NPN	TO-106 Selected from 2N3563
Q374	*151-0230-00	B010100	B010359	Silicon	NPN	TO-105 Selected from RCA 40235
Q374	151-0282-00	B010360		Silicon	NPN	TO-72 2N5179
Q376	*151-0230-00	B010100	B010359	Silicon	NPN	TO-105 Selected from RCA 40235
Q376	151-0259-00	B010360		Silicon	NPN	TO-106 Selected from 2N3563
Q3B2	*151-0230-00	B010100	B010359	Silicon	NPN	TO-105 Selected from RCA 40235
Q3B2	151-0282-00	B010360		Silicon	NPN	TO-72 2N5179
Q384	*151-0230-00	B010100	B010359	Silicon	NPN	TO-105 Selected from RCA 40235
Q384	151-0259-00	B010360		Silicon	NPN	TO-106 Selected from 2N3563
Q390	*151-0230-00	B010100	B010359	Silicon	NPN	TO-105 Selected from RCA 40235
Q390	151-0282-00	B010360		Silicon	NPN	TO-72 2N5179
Q392	*151-0230-00	B010100	B010359	Silicon	NPN	TO-105 Selected from RCA 40235
Q392	151-0259-00	B010360		Silicon	NPN	TO-106 Selected from 2N3563
Q400	*151-0230-00	B010100	B010359	Silicon	NPN	TO-105 Selected from RCA 40235
Q400	151-0282-00	B010360		Silicon	NPN	TO-72 2N5179
Q402	*151-0230-00	B010100	B010359	Silicon	NPN	TO-105 Selected from RCA 40235
Q402	151-0259-00	B010360		Silicon	NPN	TO-106 Selected from 2N3563
Q405	151-02B2-00			Silicon	NPN	TO-72 2N5179
Q407	151-0282-00			Silicon	NPN	TO-72 2N5179
Q418	151-0220-00			Silicon	NPN	TO-18 2N4122

Resistors

Resistors are fixed, composition, ±10% unless otherwise indicoted.

R100	315-0625-00	6.2 MΩ	1/4 W		5%
R101	321-1485-00	1.11 MΩ	1/8 W	Prec	1%
R102	315-0395-00	3.9 MΩ	1/4 W		5%
R103	317-0510-00	51 Ω	1/8 W		5%
R104	321-04B1-00	1 MΩ	1/8 W	Prec	1%

A1 HIGH FREQ COUNTER Circuit Board Assembly (cont)

Ckt. No.	Tektronix Port No.	Seriol/Model No. Eff	Disc	Description			
				Resistors (cont)			
R105	321-0394-00			124 kΩ	1/8 W	Prec	1%
R107	323-0126-00			200 Ω	1/2 W	Prec	1%
R108	323-0126-00			200 Ω	1/2 W	Prec	1%
R109	323-0126-00			200 Ω	1/2 W	Prec	1%
R110	323-0126-00			200 Ω	1/2 W	Prec	1%
R111	317-0200-00			20 Ω	1/8 W		5%
R112	321-0481-00			1 MΩ	1/8 W	Prec	1%
R113	317-0511-00			510 Ω	1/8 W		5%
R117	317-0102-00			1 kΩ	1/8 W		5%
R118	315-0394-00			390 kΩ	1/4 W		5%
R119	321-0481-00			1 MΩ	1/8 W	Prec	1%
R120	317-0473-00			47 kΩ	1/8 W		5%
R121	315-0104-00			100 kΩ	1/4 W		5%
R125	311-0613-00			100 kΩ, Var			
R126	317-0105-00			1 MΩ	1/8 W		5%
R127	317-0823-00			82 kΩ	1/8 W		5%
R128	317-0106-00			10 MΩ	1/8 W		5%
R130	317-0471-00			470 Ω	1/8 W		5%
R131	321-0239-00			3.01 kΩ	1/8 W	Prec	1%
R134	321-0184-00			806 Ω	1/8 W	Prec	1%
R135	321-0086-00			76.8 Ω	1/8 W	Prec	1%
R136	317-0274-00			270 kΩ	1/8 W		5%
R137	317-0105-00			1 MΩ	1/8 W		5%
R138	321-0126-00			200 Ω	1/8 W	Prec	1%
R140	321-0085-00			75 Ω	1/8 W	Prec	1%
R142	317-0221-00			220 Ω	1/8 W		5%
R144	321-0126-00			200 Ω	1/8 W	Prec	1%
R145	321-0114-00			150 Ω	1/8 W	Prec	1%
R148	315-0820-00			82 Ω	1/4 W		5%
R149	321-0055-00			36.5 Ω	1/8 W	Prec	1%
R151	317-0100-00	B010100	B010102X	10 Ω	1/8 W		5%
R151	317-0750-00			75 Ω	1/8 W		5%
R152	321-0189-00			909 Ω	1/8 W	Prec	1%
R153	321-0093-00			90.9 Ω	1/8 W	Prec	1%
R154	321-0068-00			49.9 Ω	1/8 W	Prec	1%
R155	317-0123-00			12 kΩ	1/8 W		5%
R157	321-0239-00			3.01 kΩ	1/8 W	Prec	1%
R158	321-0180-00			732 Ω	1/8 W	Prec	1%
R159	321-0268-00			6.04 kΩ	1/8 W	Prec	1%
R161	321-0209-00			1.47 kΩ	1/8 W	Prec	1%
R162	317-0104-00			100 kΩ	1/8 W		5%
R165	317-0330-00			33 Ω	1/8 W		5%
R166	317-0201-00			200 Ω	1/8 W		5%
R167	317-0101-00			100 Ω	1/8 W		5%
R170	317-0750-00			75 Ω	1/8 W		5%
R171	321-0193-00			1 kΩ	1/8 W	Prec	1%
R172	317-0390-00			39 Ω	1/8 W		5%
R173	317-0750-00			75 Ω	1/8 W		5%
R175	317-0120-00			12 Ω	1/8 W		5%

A1 HIGH FREQ COUNTER Circuit Board Assembly (cont)

Ckt. No.	Tektronix Port No.	Seriol/Model No. Eff	Disc	Description		
				Resistors (cont)		
R179	321-0159-00			442 Ω	1/8 W	Prec 1%
R184	317-0510-00			51 Ω	1/8 W	5%
R185	317-0560-00			56 Ω	1/8 W	5%
R187	321-0088-00			80.6 Ω	1/8 W	Prec 1%
R192	317-0201-00			200 Ω	1/8 W	5%
R196	321-0097-00			100 Ω	1/8 W	Prec 1%
R198	305-0101-00			100 Ω	2 W	5%
R210	315-0201-00			200 Ω	1/4 W	5%
R212	317-0510-00			51 Ω	1/8 W	5%
R213	317-0512-00			5.1 kΩ	1/8 W	5%
R214	321-0193-00			1 kΩ	1/8 W	Prec 1%
R216	317-0102-00			1 kΩ	1/8 W	5%
R218	321-0126-00			200 Ω	1/8 W	Prec 1%
R219	317-0272-00			2.7 kΩ	1/8 W	5%
R220	317-0201-00			200 Ω	1/8 W	5%
R222	321-0085-00			75 Ω	1/8 W	Prec 1%
R225	311-0613-00			100 kΩ, Vor		
R226	317-0105-00			1 MΩ	1/8 W	5%
R227	317-0512-00			5.1 kΩ	1/8 W	5%
R228	317-0474-00			470 kΩ	1/8 W	5%
R230	317-0471-00			470 Ω	1/8 W	5%
R231	321-0239-00			3.01 kΩ	1/8 W	Prec 1%
R232	317-0510-00			51 Ω	1/8 W	5%
R233	323-0181-00			750 Ω	1/2 W	Prec 1%
R234	321-0184-00			806 Ω	1/8 W	Prec 1%
R235	321-0086-00			76.8 Ω	1/8 W	Prec 1%
R236	317-0274-00			270 kΩ	1/8 W	5%
R237	317-0105-00			1 MΩ	1/8 W	5%
R238	321-0121-00			178 Ω	1/8 W	Prec 1%
R240	321-0085-00			75 Ω	1/8 W	Prec 1%
R245	321-0114-00			150 Ω	1/8 W	Prec 1%
R248	317-0101-00			100 Ω	1/8 W	5%
R249	321-0055-00			36.5 Ω	1/8 W	Prec 1%
R251	317-0100-00	B010100	B010102X	10 Ω	1/8 W	5%
R253	321-0093-00			90.9 Ω	1/8 W	Prec 1%
R254	321-0068-00			49.9 Ω	1/8 W	Prec 1%
R255	317-0123-00			12 kΩ	1/8 W	5%
R258	317-0393-00			39 kΩ	1/8 W	5%

A1 HIGH FREQ COUNTER Circuit Board Assembly (cont)

Ckt. No.	Tektronix Part No.	Serial/Model No. Eff	Disc	Description			
				Resistors (cont)			
R267	317-0101-00			100 Ω	1/8 W		5%
R270	317-0330-00			33 Ω	1/8 W		5%
R271	321-0193-00			1 kΩ	1/8 W	Prec	1%
R272	317-0750-00			75 Ω	1/8 W		5%
R273	317-0150-00			15 Ω	1/8 W		5%
R274	321-0199-00			1.15 kΩ	1/8 W	Prec	1%
R275	317-0510-00			51 Ω	1/8 W		5%
R276	317-0750-00			75 Ω	1/8 W		5%
R277	317-0510-00	8010100	B010102	51 Ω	1/8 W		5%
R277	315-0821-00	8010103		820 Ω	1/4 W		5%
R284	317-0510-00			51 Ω	1/8 W		5%
R288	321-0105-00			121 Ω	1/8 W	Prec	1%
R296	317-0100-00			10 Ω	1/8 W		5%
R300	321-0118-00			165 Ω	1/8 W	Prec	1%
R301	321-0766-06			4.053 kΩ	1/8 W	Prec	1/4%
R302	321-0642-00			20.3 kΩ	1/8 W	Prec	1/4%
R304	317-0333-00			33 kΩ	1/8 W		5%
R306	317-0123-00			12 kΩ	1/8 W		5%
R308	317-0273-00			27 kΩ	1/8 W		5%
R310	317-0102-00			1 kΩ	1/8 W		5%
R312	317-0622-00			6.2 kΩ	1/8 W		5%
R314	317-0432-00			4.3 kΩ	1/8 W		5%
R316	317-0182-00			1.8 kΩ	1/8 W		5%
R318	303-0360-00			36 Ω	1 W		5%
R320	311-0634-00			500 Ω, Var			
R321	317-0302-00			3 kΩ	1/8 W		5%
R324	317-0103-00			10 kΩ	1/8 W		5%
R327	317-0222-00			2.2 kΩ	1/8 W		5%
R331	317-0510-00			51 Ω	1/8 W		5%
R332	315-0102-00			1 kΩ	1/4 W		5%
R334	317-0272-00			2.7 kΩ	1/8 W		5%
R336	317-0510-00			51 Ω	1/8 W		5%
R337	317-0471-00			470 Ω	1/8 W		5%
R338	317-0471-00			470 Ω	1/8 W		5%
R339	317-0153-00			15 kΩ	1/8 W		5%
R341	317-0100-00			10 Ω	1/8 W		5%
R342	317-0510-00			51 Ω	1/8 W		5%
R343	322-0170-00			576 Ω	1/4 W	Prec	1%
R344	317-0101-00	8010100	B010102	100 Ω	1/8 W		5%
R344	317-0200-00	B010103		20 Ω	1/8 W		5%
R345	317-0270-00			27 Ω	1/8 W		5%
R346	321-0068-00	8010100	B010359	49.9 Ω	1/8 W	Prec	1%
R346	321-0076-00	B010360		60.4 Ω	1/8 W	Prec	1%

A1 HIGH FREQ COUNTER Circuit Board Assembly (cont)

Ckt. No.	Tektronix Part No.	Seriol/Model No. Eff	Disc	Description			
				Resistors (cont)			
R347	321-0068-00	B010100	B010359	49.9 Ω	1/8 W	Prec	1%
R347	321-0065-00	B010360		46.4 Ω	1/8 W	Prec	1%
R348	317-0100-00			10 Ω	1/8 W		5%
R349	321-0323-00			22.6 kΩ	1/8 W	Prec	1%
R350	317-0153-00			15 kΩ	1/8 W		5%
R351	317-0102-00			1 kΩ	1/8 W		5%
R352	317-0153-00			15 kΩ	1/8 W		5%
R354	317-0473-00			47 kΩ	1/8 W		5%
R356	315-0161-00			160 Ω	1/4 W		5%
R357	317-0102-00	B010100	B010359	1 kΩ	1/8 W		5%
R357	317-0101-00	B010360		100 Ω	1/8 W		5%
R358	317-0333-00			33 kΩ	1/8 W		5%
R359	317-0511-00			510 Ω	1/8 W		5%
R361	321-0245-00			3.48 kΩ	1/8 W	Prec	1%
R362	317-0101-00			100 Ω	1/8 W		5%
R363	321-0199-00	B010100	B010359	1.15 kΩ	1/8 W	Prec	1%
R363	321-0175-00	B010360		649 Ω	1/8 W	Prec	1%
R365	321-0239-00			3.01 kΩ	1/8 W	Prec	1%
R367	317-0392-00			3.9 kΩ	1/8 W		5%
R369	321-0114-00	B010100	B010359	150 Ω	1/8 W	Prec	1%
R369	321-0097-00	B010360		100 Ω	1/8 W	Prec	1%
R370	317-0392-00			3.9 kΩ	1/8 W		5%
R371	317-0392-00			3.9 kΩ	1/8 W		5%
R372	321-0114-00	B010100	B010359	150 Ω	1/8 W	Prec	1%
R372	321-0097-00	B010360		100 Ω	1/8 W	Prec	1%
R373	317-0392-00			3.9 kΩ	1/8 W		5%
R375	321-0199-00	B010100	B010359	1.15 kΩ	1/8 W	Prec	1%
R375	321-0175-00	B010360		649 Ω	1/8 W	Prec	1%
R377	321-0239-00			3.01 kΩ	1/8 W	Prec	1%
R379	317-0392-00			3.9 kΩ	1/8 W		5%
R380	321-0114-00	B010100	B010359	150 Ω	1/8 W	Prec	1%
R380	321-0097-00	B010360		100 Ω	1/8 W	Prec	1%
R381	317-0392-00			3.9 kΩ	1/8 W		5%
R383	321-0199-00	B010100	B010359	150 Ω	1/8 W	Prec	1%
R383	321-0175-00	B010360		649 Ω	1/8 W	Prec	1%
R385	321-0239-00			3.9 kΩ	1/8 W	Prec	1%
R387	317-0392-00			1.15 kΩ	1/8 W		5%
R388	321-0114-00	B010100	B010359	150 Ω	1/8 W	Prec	1%
R388	321-0097-00	B010360		100 Ω	1/8 W	Prec	1%
R389	317-0392-00			3.9 kΩ	1/8 W		5%
R391	321-0199-00	B010100	B010359	1.15 kΩ	1/8 W	Prec	1%
R391	321-0175-00	B010360		649 Ω	1/8 W	Prec	1%
R394	321-0239-00			3.01 kΩ	1/8 W	Prec	1%
R396	317-0392-00			3.9 kΩ	1/8 W		5%
R398	321-0114-00	B010100	B010359	150 kΩ	1/8 W	Prec	1%
R398	321-0097-00	B010360		100 Ω	1/8 W	Prec	1%
R399	317-0392-00			3.9 kΩ	1/8 W		5%
R401	321-0199-00	B010100	B010359	1.15 kΩ	1/8 W	Prec	1%
R401	321-0175-00	B010360		649 Ω	1/8 W	Prec	1%
R403	321-0239-00			3.01 kΩ	1/8 W	Prec	1%

A1 HIGH FREQ COUNTER Circuit Board Assembly (cont)

Ckt. No.	Tektronix Part No.	Serial/Model No. Eff	Disc	Description			
				Resistors (cont)			
R404	317-0511-00			510 Ω	1/8 W		5%
R406	321-0176-00	B010100	B010102	665 Ω	1/8 W	Prec	1%
R406	321-0171-00	B010103		590 Ω	1/8 W	Prec	1%
R408	317-0511-00			510 Ω	1/8 W		5%
R410	317-0390-00			39 Ω	1/8 W		5%
R411	317-0332-00			3.3 kΩ	1/8 W		5%
R414	317-0102-00			1 kΩ	1/8 W		5%
R417	317-0471-00			470 Ω	1/8 W		5%
R418	317-0100-00			10 Ω	1/8 W		5%
R419	317-0751-00			750 Ω	1/8 W		5%
R423	317-0392-00			3.9 kΩ	1/8 W		5%
R426	317-0153-00			15 kΩ	1/8 W		5%
R428	317-0153-00			15 kΩ	1/8 W		5%
R430	317-0153-00			15 kΩ	1/8 W		5%
R432	317-0153-00			15 kΩ	1/8 W		5%
R454	315-0102-00			1 kΩ	1/4 W		5%
				Transformers			
T143	*120-0286-00			Taraid, 2 turns, bifilar			
T163	*120-0286-00	XB010103		Toraid, 2 turns, bifilar			
T183	*120-0444-00			Taroid, 5 turns, bifilar			
T193	*120-0444-00			Taraid, 5 turns, bifilar			
T346	*120-0444-00			Toroid, 5 turns, bifilar			
				Integrated Circuits			
U161	156-0067-00			Op amp. Replaceable by Fairchild μA741C			
U305	156-0048-00			Linear. Replaceable by RCA CA3046			
U329	*155-0046-00			Monalithic			
U420	156-0048-00			Linear. Replaceable by RCA CA3046			
U434	156-0030-00			Quad 2-input gate. Replaceable by T.I. SN7400N			
U440	156-0097-00			Presettable high speed decade counter. Replaceable by Signetics selected N8290A			
U442	156-0097-00			Presettable high speed decade counter. Replaceable by Signetics selected N8290A			
U444	156-0091-00			Presettable law pwr decade counter. Replaceable by Signetics N8292A			
U446	156-0091-00			Presettable low pwr decade counter. Replaceable by Signetics N8292A			
U448	156-0091-00			Presettable low pwr decade caunter. Replaceable by Signetics N8292A			
U450	156-0091-00			Presettable low pwr decade counter. Replaceable by Signetics N8292A			
U452	156-0091-00			Presettable law pwr decade counter. Replaceable by Signetics N8292A			
U455	156-0091-00			Presettable low pwr decade counter. Replaceable by Signetics N8292A			

A1 HIGH FREQ COUNTER Circuit Board Assembly (cont)

Ckt. No.	Tektronix Part No.	Serial/Model No. Eff	Disc	Description
				Integrated Circuits (cont)
U457	156-0091-00			Presettable law pwr decade counter. Replaceable by Signetics N8292A
U459	156-0091-00			Presettable law pwr decade counter. Replaceable by Signetics N8292A
U461	156-0091-00			Presettable law pwr decade counter. Replaceable by Signetics N8292A
U463	156-0091-00			Presettable law pwr decade counter. Replaceable by Signetics N8292A
U465	156-0091-00			Presettable law pwr decade counter. Replaceable by Signetics N8292A
U467	156-0091-00			Presettable law pwr decade counter. Replaceable by Signetics N8292A
U469	156-0091-00			Presettable law pwr decade counter. Replaceable by Signetics N8292A

A2 LOGIC Circuit Board Assembly

*670-0992-00	B010100	B010129	Complete Board
*670-0992-01	B010130	B010214	Complete Board
*670-0992-02	B010215		Complete Board

Capacitors

Tolerance ±20% unless otherwise indicated.

C520	283-0003-00	0.001 μF	Cer	150 V	
C540	283-0003-00	0.01 μF	Cer	150 V	
C588	283-0003-00	0.01 μF	Cer	150 V	
C604	283-0076-00	27 pF	Cer	500 V	10%
C610	283-0076-00	27 pF	Cer	500 V	10%
C611	283-0212-00	2 μF	Cer	50 V	
C621	283-0000-00	0.001 μF	Cer	500 V	
C640	283-0003-00	0.01 μF	Cer	150 V	
C716	283-0076-00	27 pF	Cer	500 V	10%
C722	283-0023-00	0.1 μF	Cer	10 V	
C727	283-0076-00	27 pF	Cer	500 V	10%
C735	283-0003-00	0.01 μF	Cer	150 V	
C743	283-0076-00	27 pF	Cer	500 V	10%
C765	283-0076-00	27 pF	Cer	500 V	10%
C778	283-0047-00	270 pF	Cer	500 V	5%
C783	283-0076-00	27 pF	Cer	500 V	10%
C788	290-0136-00	2.2 μF	Elect.	20 V	
C871	281-0618-00	4.7 pF	Cer	200 V	±0.5 pF
C984	290-0134-00	22 μF	Elect.	15 V	
C986	283-0111-00	1 μF	Cer	50 V	
C988	290-0135-00	15 μF	Elect.	20 V	

A2 LOGIC Circuit Board Assembly (cont)

Ckt. No.	Tektronix Part No.	Serial/Model No. Eff	Disc	Description
		Semiconductor Device, Diodes		
CR575	*152-0185-00			Silicon Replaceable by 1N4152
CR577	*152-0185-00			Silicon Replaceable by 1N4152
CR579	*152-0185-00			Silicon Replaceable by 1N4152
CR585	*152-0185-00			Silicon Replaceable by 1N4152
CR588	*152-0185-00			Silicon Replaceable by 1N4152
CR589	*152-0185-00			Silicon Replaceable by 1N4152
CR590	*152-0185-00			Silicon Replaceable by 1N4152
CR591	*152-0185-00			Silicon Replaceable by 1N4152
CR592	*152-0185-00			Silican Replaceable by 1N4152
CR606	*152-0185-00			Silican Replaceable by 1N4152
CR607	*152-0185-00			Silicon Replaceable by 1N4152
CR611	*152-0185-00			Silicon Replaceable by 1N4152
CR612	*152-0185-00			Silicon Replaceable by 1N4152
CR624	152-0071-00			Germanium ED-2007
CR655	*152-0185-00			Silicon Replaceable by 1N4152
CR656	*152-0185-00			Silican Replaceable by 1N4152
CR659	*152-0185-00			Silicon Replaceable by 1N4152
CR665	*152-0185-00			Silicon Replaceable by 1N4152
CR666	*152-0185-00			Silicon Replaceable by 1N4152
CR671	*152-0185-00			Silican Replaceable by 1N4152
CR676	*152-0185-00			Silicon Replaceable by 1N4152
CR677	*152-0185-00			Silicon Replaceable by 1N4152
CR678	*152-0185-00			Silicon Replaceable by 1N4152
CR681	*152-0185-00			Silicon Replaceable by 1N4152
CR701	*152-0185-00			Silicon Replaceable by 1N4152
CR713	152-0141-02			Silicon 1N4152
CR715	152-0071-00			Germanium ED-2007
CR717	*152-0185-00			Silicon Replaceable by 1N4152
CR722	*152-0185-00			Silicon Replaceable by 1N4152
CR738	*152-0322-00			Silicon Tek Spec
CR744	*152-0185-00			Silicon Replaceable by 1N4152
CR746	*152-0185-00			Silican Replaceable by 1N4152
CR747	*152-0185-00			Silicon Replaceable by 1N4152
CR748	152-0141-02			Silicon 1N4152
CR758	*152-0185-00			Silicon Replaceable by 1N4152
CR763	*152-0185-00			Silicon Replaceable by 1N4152
CR765	*152-0185-00			Silicon Replaceable by 1N4152
CR770	*152-0185-00	B010100	B010102X	Silicon Replaceable by 1N4152
CR783	*152-0185-00			Silicon Replaceable by 1N4152
CR786	*152-0185-00			Silicon Replaceable by 1N4152
VR513	152-0149-00			Zener 1N961B 400 mW, 10 V, 5%

A2 LOGIC Circuit Board Assembly (cont)

Ckt. No.	Tektronix Part No.	Serial/Model No. Eff	Disc	Description
		Semiconductor Device, Diodes (cont)		
VR521	152-0168-00			Zener 1N963A 400 mW, 12 V, 5%
VR525	152-0168-00			Zener 1N963A 400 mW, 12 V, 5%
VR529	152-0168-00			Zener 1N963A 400 mW, 12 V, 5%
VR533	152-0168-00			Zener 1N963A 400 mW, 12 V, 5%
VR537	152-0168-00			Zener 1N963A 400 mW, 12 V, 5%
VR541	152-0168-00			Zener 1N963A 400 mW, 12 V, 5%
VR545	152-0168-00			Zener 1N963A 400 mW, 12 V, 5%
VR549	152-0168-00			Zener 1N963A 400 mW, 12 V, 5%
VR573	152-0149-00			Zener 1N961B 400 mW, 10 V, 5%
		Inductors		
L744	*108-0443-00			25 μH
L752	*120-0382-00			Toroid, 14 turns, single
L793	*120-0382-00			Toroid, 14 turns, single
LR984	*108-0537-00			200 μH (wound on a 30 Ω, 1/8 W, 5% resistor)
LR986	*108-0537-00			200 μH (wound on a 30 Ω, 1/8 W, 5% resistor)
LR988	*108-0537-00			200 μH (wound on a 30 Ω, 1/8 W, 5% resistor)
		Transistors		
Q512	*151-0230-00	B010100	B010359	Silicon NPN TO-105 Selected from RCA 40235
Q512	*151-0333-00	B010360		Silicon NPN TO-92 Selected from MPS 918
Q515	151-0190-00			Silicon NPN TO-92 2N3904
Q570	151-0220-00			Silicon PNP TO-18 2N4122
Q581	151-0190-00			Silicon NPN TO-92 2N3904
Q591	151-0190-00			Silicon NPN TO-92 2N3904
Q606	151-0190-00			Silicon NPN TO-92 2N3904
Q613	*151-0192-00			Silicon NPN TO-92 Replaceable by MPS6521
Q618	*151-0192-00			Silicon NPN TO-92 Replaceable by MPS6521
Q623	151-0190-00			Silicon NPN TO-92 2N3904
Q653	151-0190-00			Silicon NPN TO-92 2N3904
Q658	151-0190-00			Silicon NPN TO-92 2N3904
Q663	151-0190-00			Silicon NPN TO-92 2N3904
Q670	151-0190-00			Silicon NPN TO-92 2N3904
Q680	151-0190-00			Silicon NPN TO-92 2N3904
Q703	151-0190-00			Silicon NPN TO-92 2N3904
Q714	151-0190-00			Silicon NPN TO-92 2N3904
Q738	151-0225-00			Silicon NPN TO-18 2N3563
Q742	*151-0190-02			Silicon NPN TO-92 2N3904
Q747	151-0190-00			Silicon NPN TO-92 2N3904
Q751	*151-0271-00			Silicon PNP TO-18 Tek Spec
Q753	*151-0271-00			Silicon PNP TO-18 Tek Spec
Q758	151-0190-00			Silicon NPN TO-92 2N3904
Q763	151-0190-00			Silicon NPN TO-92 2N3904
Q768	151-0190-00			Silicon NPN TO-92 2N3904
Q776	151-0190-00			Silicon NPN TO-92 2N3904

A2 LOGIC Circuit Board Assembly (cont)

Ckt. No.	Tektronix Part No.	Serial/Model No. Eff	Disc	Description
				Transistors (cont)
Q781	151-0190-00			Silicon NPN TO-92 2N3904
Q791	151-0513-00			Silicon TO-72 2N4835 Unijunction
Q796	151-0190-00			Silicon NPN TO-92 2N3904
Q798	151-0190-00			Silicon NPN TO-92 2N3904
Q855	*151-0271-00			Silicon PNP TO-18 Tek Spec
Q859	*151-0271-00			Silicon PNP TO-18 Tek Spec
				Resistors
Resistors are fixed, composition, ±10% unless otherwise indicated.				
R510	315-0102-00			1 kΩ ¼ W 5%
R511	315-0223-00			22 kΩ ¼ W 5%
R512	315-0102-00			1 kΩ ¼ W 5%
R516	315-0473-00			47 kΩ ¼ W 5%
R517	315-0473-00			47 kΩ ¼ W 5%
R518	315-0473-00			47 kΩ ¼ W 5%
R519	315-0473-00			47 kΩ ¼ W 5%
R521	317-0101-00			100 Ω ⅛ W 5%
R522	315-0163-00			16 kΩ ¼ W 5%
R523	315-0472-00			4.7 kΩ ¼ W 5%
R525	317-0101-00			100 Ω ⅛ W 5%
R526	315-0163-00			16 kΩ ¼ W 5%
R527	315-0472-00			4.7 k ¼ W 5%
R529	317-0101-00			100 Ω ⅛ W 5%
R530	315-0163-00			16 kΩ ¼ W 5%
R531	315-0472-00			4.7 kΩ ¼ W 5%
R533	317-0101-00			100 Ω ⅛ W 5%
R534	315-0163-00			16 kΩ ¼ W 5%
R535	315-0472-00			4.7 kΩ ¼ W 5%
R537	317-0101-00			100 Ω ⅛ W 5%
R538	315-0163-00			16 kΩ ¼ W 5%
R539	315-0103-00			10 kΩ ¼ W 5%
R541	317-0101-00			100 Ω ⅛ W 5%
R542	315-0163-00			16 kΩ ¼ W 5%
R543	315-0103-00			10 kΩ ¼ W 5%
R546	315-0163-00			16 kΩ ¼ W 5%
R547	315-0103-00			10 kΩ ¼ W 5%
R549	317-0101-00			100 Ω ⅛ W 5%
R550	315-0163-00			16 kΩ ¼ W 5%
R551	315-0103-00			10 kΩ ¼ W 5%

A2 LOGIC Circuit Board Assembly (cont)

Ckt. No.	Tektronix Part No.	Serial/Model No. Eff	Disc	Description		
				Resistors (cont)		
R555	315-0102-00			1 kΩ	¼ W	5%
R556	315-0102-00			1 kΩ	¼ W	5%
R557	315-0102-00			1 kΩ	¼ W	5%
R558	315-0102-00			1 kΩ	¼ W	5%
R559	315-0242-00			2.4 kΩ	¼ W	5%
R561	315-0163-00			16 kΩ	¼ W	5%
R563	321-0396-00			130 kΩ	⅛ W Prec	1%
R565	321-0396-00			130 kΩ	⅛ W Prec	1%
R566	321-0369-00			68.1 kΩ	⅛ W Prec	1%
R567	321-0340-00			34 kΩ	⅛ W Prec	1%
R568	321-0311-00			16.9 kΩ	⅛ W Prec	1%
R570	315-0102-00			1 kΩ	¼ W	5%
R572	315-0473-00			47 kΩ	¼ W	5%
R574	315-0103-00			10 kΩ	¼ W	5%
R575	317-0273-00			27 kΩ	⅛ W	5%
R576	315-0333-00			33 kΩ	¼ W	5%
R580	315-0123-00			12 kΩ	¼ W	5%
R582	315-0104-00			100 kΩ	¼ W	5%
R583	315-0562-00			5.6 kΩ	¼ W	5%
R584	315-0123-00			12 kΩ	¼ W	5%
R586	315-0154-00			150 kΩ	¼ W	5%
R588	315-0221-00			220 Ω	¼ W	5%
R590	321-0305-00			14.7 kΩ	⅛ W Prec	1%
R592	315-0104-00			100 kΩ	¼ W	5%
R593	315-0562-00			5.6 kΩ	¼ W	5%
R594	315-0123-00			12 kΩ	¼ W	5%
R596	315-0473-00			47 kΩ	¼ W	5%
R602	315-0473-00			47 kΩ	¼ W	5%
R604	315-0103-00			10 kΩ	¼ W	5%
R606	315-0102-00			1 kΩ	¼ W	5%
R610	315-0103-00			10 kΩ	¼ W	5%
R612	315-0103-00			10 kΩ	¼ W	5%
R613	315-0222-00			2.2 kΩ	¼ W	5%
R614	315-0272-00			2.7 kΩ	¼ W	5%
R615	315-0391-00			390 Ω	¼ W	5%
R616	315-0273-00			27 kΩ	¼ W	5%
R618	315-0102-00			1 kΩ	¼ W	5%
R619	315-0474-00			470 kΩ	¼ W	5%
R620	315-0752-00			7.5 kΩ	¼ W	5%
R621	315-0511-00			510 Ω	¼ W	5%

A2 LOGIC Circuit Board Assembly (cont)

Ckt. No.	Tektronix Part No.	Serial/Model No. Eff	Disc	Description		
				Resistors (cont)		
R623	315-0681-00			680 Ω	1/4 W	5%
R624	315-0752-00			7.5 kΩ	1/4 W	5%
R626	315-0102-00			1 kΩ	1/4 W	5%
R650	315-0223-00			22 kΩ	1/4 W	5%
R651	315-0473-00			47 kΩ	1/4 W	5%
R653	315-0223-00			22 kΩ	1/4 W	5%
R655	315-0153-00			15 kΩ	1/4 W	5%
R656	315-0153-00			15 kΩ	1/4 W	5%
R657	315-0154-00			150 kΩ	1/4 W	5%
R659	315-0753-00			75 kΩ	1/4 W	5%
R660	315-0222-00			2.2 kΩ	1/4 W	5%
R661	315-0473-00			47 kΩ	1/4 W	5%
R663	315-0223-00			22 kΩ	1/4 W	5%
R665	315-0153-00			15 kΩ	1/4 W	5%
R666	315-0752-00			7.5 kΩ	1/4 W	5%
R668	315-0822-00			8.2 kΩ	1/4 W	5%
R669	315-0154-00			150 kΩ	1/4 W	5%
R671	315-0154-00			150 kΩ	1/4 W	5%
R673	321-0335-00			30.1 kΩ	1/8 W Prec	1%
R674	321-0327-00			24.9 kΩ	1/8 W Prec	1%
R677	315-0153-00			15 kΩ	1/4 W	5%
R678	315-0153-00			15 kΩ	1/4 W	5%
R679	315-0154-00			150 kΩ	1/4 W	5%
R681	315-0154-00			150 kΩ	1/4 W	5%
R682	315-0103-00			10 kΩ	1/4 W	5%
R683	321-0327-00			24.9 kΩ	1/8 W Prec	1%
R684	321-0356-00			49.9 kΩ	1/8 W Prec	1%
R686	321-0335-00			30.1 kΩ	1/8 W Prec	1%
R687	321-0344-00			37.4 kΩ	1/8 W Prec	1%
R688	321-0344-00			37.4 kΩ	1/8 W Prec	1%
R689	321-0335-00			30.1 kΩ	1/8 W Prec	1%
R700	315-0822-00			8.2 kΩ	1/4 W	5%
R701	315-0473-00			47 kΩ	1/4 W	5%
R703	315-0473-00			47 kΩ	1/4 W	5%
R705	315-0473-00			47 kΩ	1/4 W	5%
R708	315-0222-00			2.2 kΩ	1/4 W	5%
R709	315-0102-00			1 kΩ	1/4 W	5%
R710	315-0393-00			39 kΩ	1/4 W	5%
R712	315-0103-00			10 kΩ	1/4 W	5%
R714	315-0102-00			1 kΩ	1/4 W	5%

A2 LOGIC Circuit Board Assembly (cont)

Ckt. No.	Tektronix Part No.	Serial/Model No. Eff	Disc	Description		
				Resistors (cont)		
R716	315-0822-00			8.2 kΩ	1/4 W	5%
R717	315-0103-00			10 kΩ	1/4 W	5%
R719	315-0222-00			2.2 kΩ	1/4 W	5%
R722	315-0103-00			10 kΩ	1/4 W	5%
R724	315-0472-00			4.7 kΩ	1/4 W	5%
R726	315-0472-00			4.7 kΩ	1/4 W	5%
R727	315-0103-00			10 kΩ	1/4 W	5%
R729	315-0102-00			1 kΩ	1/4 W	5%
R732	315-0102-00			1 kΩ	1/4 W	5%
R737	315-0222-00			2.2 kΩ	1/4 W	5%
R738	301-0152-00			1.5 kΩ	1/2 W	5%
R740	315-0472-00			4.7 kΩ	1/4 W	5%
R741	315-0152-00			1.5 kΩ	1/4 W	5%
R742	315-0222-00			2.2 kΩ	1/4 W	5%
R744	315-0102-00			1 kΩ	1/4 W	5%
R747	315-0472-00			4.7 kΩ	1/4 W	5%
R749	315-0103-00			10 kΩ	1/4 W	5%
R750	315-0101-00			100 Ω	1/4 W	5%
R752	322-0189-00			909 Ω	1/4 W Prec	1%
R754	315-0101-00			100 Ω	1/4 W	5%
R757	315-0102-00			1 kΩ	1/4 W	5%
R758	315-0102-00			1 kΩ	1/4 W	5%
R759	315-0473-00			47 kΩ	1/4 W	5%
R760	315-0222-00			2.2 kΩ	1/4 W	5%
R761	315-0102-00			1 kΩ	1/4 W	5%
R763	315-0102-00			1 kΩ	1/4 W	5%
R765	315-0102-00			1 kΩ	1/4 W	5%
R766	315-0473-00			47 kΩ	1/4 W	5%
R768	315-0223-00			22 kΩ	1/4 W	5%
R770	315-0473-00	8010100	B010102X	47 kΩ	1/4 W	5%
R772	315-0103-00			10 kΩ	1/4 W	5%
R775	315-0272-00			2.7 kΩ	1/4 W	5%
R777	315-0821-00			820 Ω	1/4 W	5%
R778	315-0682-00			6.8 kΩ	1/4 W	5%
R779	315-0102-00			1 kΩ	1/4 W	5%
R780	315-0222-00			2.2 kΩ	1/4 W	5%
R782	315-0473-00			47 kΩ	1/4 W	5%
R783	315-0103-00			10 kΩ	1/4 W	5%
R785	315-0473-00			47 kΩ	1/4 W	5%
R787	315-0473-00			47 kΩ	1/4 W	5%

A2 LOGIC Circuit Board Assembly (cont)

Ckt. No.	Tektronix Part No.	Serial/Model No. Eff	Disc	Description	
			Resistors (cont)		
R788	315-0102-00		1 kΩ	1/4 W	5%
R789	315-0223-00		22 kΩ	1/4 W	5%
R791	315-0221-00		220 Ω	1/4 W	5%
R793	315-0100-00		10 Ω	1/4 W	5%
R794	315-0123-00		12 kΩ	1/4 W	5%
R795	315-0103-00		10 kΩ	1/4 W	5%
R796	315-0222-00		2.2 kΩ	1/4 W	5%
R798	315-0103-00		10 kΩ	1/4 W	5%
R850	315-0101-00		100 Ω	1/4 W	5%
R852	315-0201-00		200 Ω	1/4 W	5%
R854	315-0101-00		100 Ω	1/4 W	5%
R855	315-0510-00		51 Ω	1/4 W	5%
R857	315-0332-00		3.3 kΩ	1/4 W	5%
R859	315-0510-00		51 Ω	1/4 W	5%
R860	315-0471-00		470 Ω	1/4 W	5%
R861	315-0152-00		1.5 kΩ	1/4 W	5%
R862	317-0121-00		120 Ω	1/8 W	5%
R863	315-0471-00		470 Ω	1/4 W	5%
R864	315-0152-00		1.5 kΩ	1/4 W	5%
R866	311-0607-00		10 kΩ, Var		
R868	317-0510-00		51 Ω	1/8 W	5%
R869	317-0510-00		51 Ω	1/8 W	5%
R871	315-0510-00		51 Ω	1/4 W	5%
R982	315-0101-00		100 Ω	1/4 W	5%
			Switch		
	Wired or Unwired				
S70	260-0723-00		Slide		
			Transformers		
T755	*120-0286-00		Taroid, 2 turns, bifilar		
T859	*120-0286-00		Toroid, 2 turns, bifilar		
T870	*120-0444-00		Taraid, 5 turns, bifilar		
			Integrated Circuits		
U500	156-0043-00		Quad 2-input NOR gate. Replaceable by T.I. SN7402N		
U502	156-0043-00		Quad 2-input NOR gate. Replaceable by T.I. SN7402N		
U504	156-0047-00		Triple 3-input gate. Replaceable by T.I. SN7410N		
U506	156-0047-00		Triple 3-input gate. Replaceable by T.I. SN7410N		
U508	156-0043-00		Quad 2-input NOR gate. Replaceable by T.I. SN7402N		

A2 LOGIC Circuit Board Assembly (cont)

Ckt. No.	Tektronix Part No.	Serial/Model No. Eff	Disc	Description
				Integrated Circuits (cont)
U510	156-0041-00			Dual D flip-flap. Replaceable by T.I. SN7474N
U514	156-0057-00			Quad 2-input NAND gate w/open coll. Replaceable by T.I. SN7401N
U520	156-0057-00			Quad 2-input NAND gate w/open coll. Replaceable by T.I. SN7401N
U524	156-0057-00			Quad 2-input NAND gate w/apen coll. Replaceable by T.I. SN7401N
U528	156-0057-00			Quad 2-input NAND gate w/open coll. Replaceable by T.I. SN7401N
U531	156-0048-00			Linear. Replaceable by RCA CA3046
U532	156-0057-00			Quad 2-input NAND gate w/open call. Replaceable by T.I. SN7401N
U536	156-0057-00			Quad 2-input NAND gate w/open coll. Replaceable by T.I. SN7401N
U540	156-0057-00			Quad 2-input NAND gate w/apen coll. Replaceable by T.I. SN7401N
U541	156-0048-00			Linear. Replaceable by RCA CA3046
U544	156-0057-00			Quad 2-input NAND gate w/open call. Replaceable by T.I. SN7401N
U548	156-0057-00			Quad 2-input NAND gate w/apen coll. Replaceable by T.I. SN7401N
U560	*155-0038-01			D-A canverter
U602	156-0091-00			Presettable low pwr decade counter. Replaceable by Signetics N8292A
U628	156-0091-00			Presettable low pwr decade counter. Replaceable by Signetics N8292A
U630	156-0091-00			Presettable low pwr decade counter. Replaceable by Signetics N8292A
U632	156-0091-00			Presettable low pwr decade counter. Replaceable by Signetics N8292A
U634	156-0091-00			Presettable low pwr decade counter. Replaceable by Signetics N8292A
U636	156-0091-00			Presettable law pwr decade counter. Replaceable by Signetics N8292A
U638	156-0091-00			Presettable low pwr decade counter. Replaceable by Signetics N8292A
U640	156-0091-00			Presettable low pwr decade counter. Replaceable by Signetics N8292A
U708	156-0057-00			Quad 2-input NAND gate w/open call. Replaceable by T.I. SN7401N
U729	156-0048-00			Linear. Replaceable by RCA CA3046
U731	156-0030-00			Quad 2-input gate. Replaceable by T.I. SN7400N
U733	156-0042-00			Dual J-K flip-flap. Replaceable by T.I. SN7476N
U735	156-0118-00			Dual J-K flip-flop. Replaceable by T.I. SN745112N
				Oscillator
Y600	119-0262-00			5 MHz

A3 TRIGGER SWITCH Circuit Board Assembly

Ckt. No.	Tektronix Part No.	Serial/Model No. Eff	Disc	Description	
	*670-1324-00			Complete Board	
				Bulb	
DS20	*150-0048-01			Incandescent #683, selected	
				Switch	
	Wired or Unwired				
S20[1]	*670-1324-00			Pushbutton	VAR/PRESET

A4 BANDWIDTH SWITCH Circuit Board Assembly

*670-1327-00	B010100	B010129	Complete Board	
*670-1327-01	B010130		Complete Board	
			Bulb	
DS8	*150-0048-01		Incandescent #683, selected	
			Switch	
	Wired or Unwired			
S8[1]	*670-1327-00	B010100	B010129	Pushbutton	BANDWIDTH
S8[1]	*670-1327-01	B010130		Pushbutton	BANDWIDTH

A5 COUPLING SWITCH Circuit Board Assembly

*670-1328-00			Complete Board	
			Bulb	
DS5	*150-0048-01		Incandescent #683, selected	
			Switch	
	Wired or Unwired			
S5[1]	*670-1328-00		Pushbutton	COUPLING

[1]See Mechanical Parts List for replacement parts.

A6 REF FREQ SWITCH Circuit Board Assembly

Ckt. No.	Tektronix Part No.	Serial/Model No. Eff	Disc	Description		
	*670-1325-00			Complete Board		
				Bulb		
DS50	*150-0048-01			Incandescent #683, selected		
				Resistor		
Resistors are fixed, composition, ±10% unless otherwise indicated.						
R51	315-0102-00			1 kΩ	¼ W	5%
				Switch		
	Wired or Unwired					
S50[5]	*670-1325-00			Pushbutton	EXT IN	

A7 INTERVAL SWITCH Circuit Board Assembly

*670-1326-00	B010100	B010129	Complete Board		
*670-1326-01	B010130		Complete Board		
			Bulbs		
DS60	*150-0048-01		Incandescent #683, selected		
DS61	*150-0048-01		Incandescent #683, selected		
			Resistor		
Resistors are fixed, composition, ±10% unless otherwise indicated.					
R61	315-0102-00		1 kΩ	¼ W	5%
			Switches		
	Wired or Unwired				
S60A, S60B [5]	*670-1326-00	B010100	B010129	Pushbutton	MEASUREMENT INTERVAL MANUAL GATE
S60A, S60B [5]	*670-1326-01	B010130		Pushbutton	MEASUREMENT INTERVAL MANUAL GATE

[5]See Mechanical Parts List for replacement parts.

SECTION 7

DIAGRAMS AND CIRCUIT BOARD ILLUSTRATIONS

Symbols and Reference Designators

Electrical components shown on the diagrams are in the following units unless noted otherwise:

Capacitors = Values one or greater are in picofarads (pF).
Values less than one are in microfarads (μF).
Resistors = Ohms (Ω)

Symbols used on the diagrams are based on USA Standard Y32.2-1967.

Logic symbology is based on MIL-STD-806B in terms of positive logic. Logic symbols depict the logic function performed and may differ from the manufacturer's data.

The following special symbols are used on the diagrams:

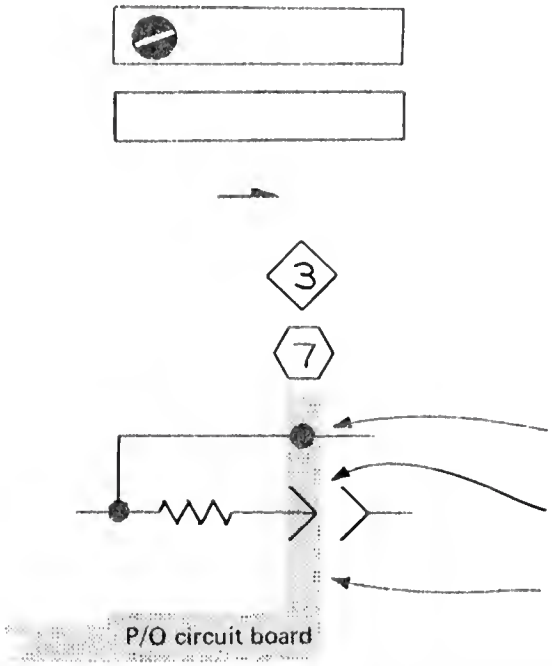

External Screwdriver adjustment.

External control or connector.

Clockwise control rotation in direction of arrow.

Refer to diagram number indicated in diamond.

Refer to waveform number indicated in hexagon.

Connection soldered to circuit board.

Connection made to circuit board with interconnecting pin.

Blue tint encloses components located on circuit board.

The following prefix letters are used as reference designators to identify components or assemblies on the diagrams.

A	Assembly, separable or repairable (circuit board, etc.)
AT	Attenuator, fixed or variable
B	Motor
BT	Battery
C	Capacitor, fixed or variable
CR	Diode, signal or rectifier
DL	Delay line
DS	Indicating device (lamp)
F	Fuse
FL	Filter
H	Heat dissipating device (heat sink, heat radiator, etc.)
HR	Heater
J	Connector, stationary portion
K	Relay
L	Inductor, fixed or variable
LR	Inductor/resistor combination
M	Meter
Q	Transistor or silicon-controlled rectifier
P	Connector, movable portion
R	Resistor, fixed or variable
RT	Thermistor
S	Switch
T	Transformer
TP	Test point
U	Assembly, inseparable or non-repairable (integrated circuit, etc.)
V	Electron tube
VR	Voltage regulator (zener diode, etc.)
Y	Crystal

VOLTAGE AND WAVEFORM TEST CONDITIONS

Typical voltage measurements were obtained under the following conditions unless noted otherwise on the individual diagrams:

Voltmeter

Type	Non-loading digital multimeter
Input Impedance	10 MΩ on all ranges
Range	0 to 1000 volts
Recommended type (as used for voltages on diagrams)	Tektronix 7D13 Digital Multimeter

7D14 (B horizontal compartment)

MEASUREMENT INTERVAL	See Waveform note on each diagram	BW	5 MHz
		COUPLING	AC
		DISPLAY TIME	0.1 s
TRIGGER	PRESET	REF REQ/CH B	INT 1 MHz
INPUT SENS	1 MΩ/1 V		

No signal input for voltage measurements. 4 V, 1 kHz square wave from oscilloscope Calibrator applied to CH A INPUT connector for waveforms.

7A16 (right vertical compartment using a 10X probe with readout coding ring. P6053 probe used for waveforms on diagrams)

Polarity	+UP
Bandwidth	Full
Position	Centered
Coupling	AC
Variable	Cal In

7B50 (A horizontal compartment)

Level/Slope	Centered on positive slope
Triggering	
Mode	Norm
Coupling	AC
Source	Ext ÷ 10
Magnifier	X1
Variable	Cal In
Ext Trig In connector	No connection for voltage measurements. For waveforms, see waveform note on each Diagram.

7704

Vertical Mode	Right
Horizontal Mode	A
A Intensity	Optimum
B Intensity	Counterclockwise
Calibrator	
Volts	40 mV
Rate	DC
A Trigger Source	Right Vert

Waveforms shown are actual waveform photographs taken with a Tektronix Oscilloscope Camera System and Projected Graticule. Vertical deflection factor shown on waveform is the actual deflection factor from the probe tip. Voltages and waveforms on the diagrams (shown in blue) are not absolute and may vary between instruments because of component tolerances, internal calibration, or front-panel settings. Readouts are simulated in larger-than-normal type.

NOTE

The spring tension of the pin sockets ensures a good connection between the circuit board and pin. This spring tension may be damaged by using the pin sockets as a connecting point for spring-loaded probe tips, alligator clips, etc.

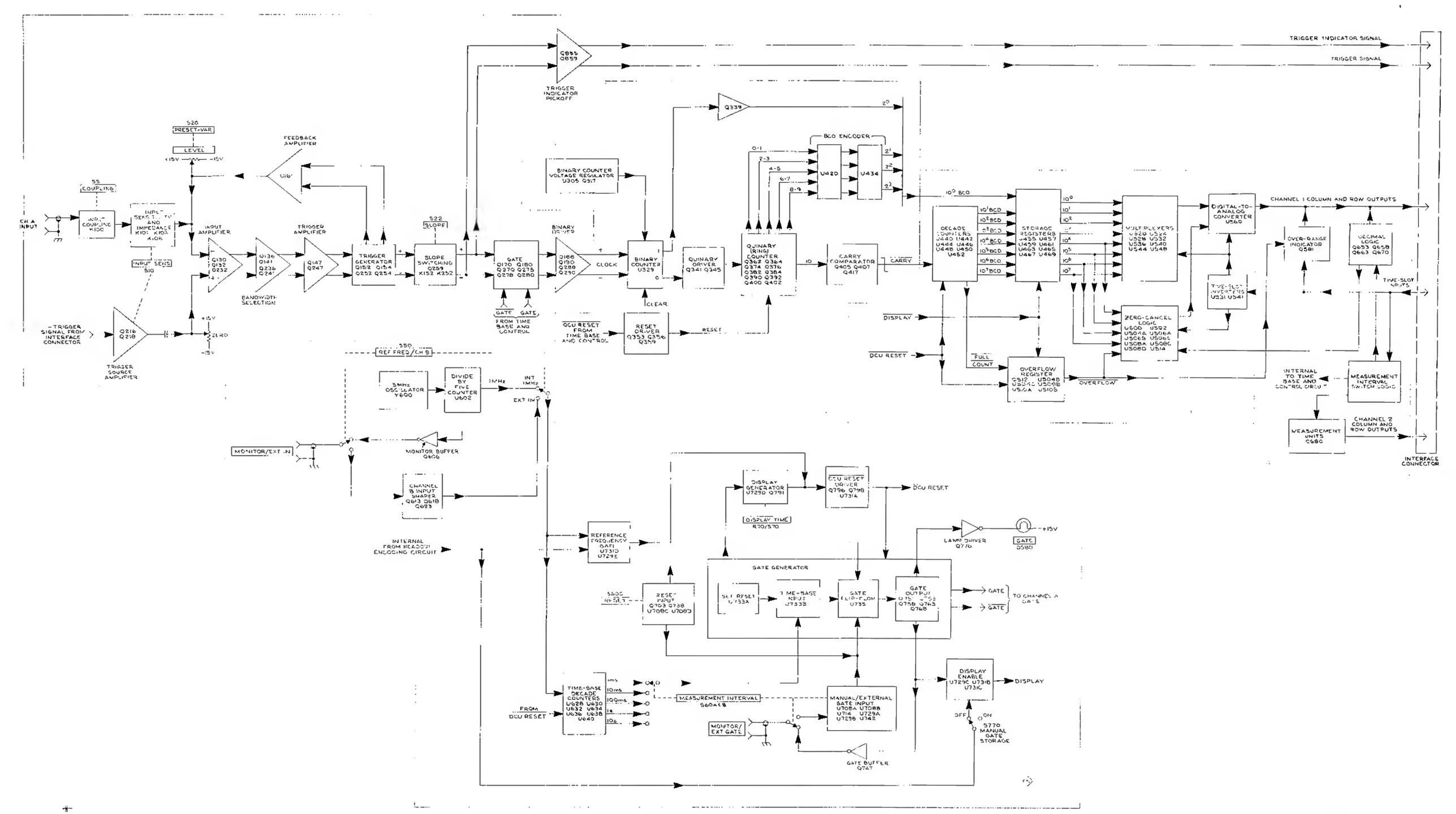
CH A INPUT
S5 COUPLING
INPUT COUPLING K100
INPUT SENSITIVITY AND IMPEDANCE K101 K102 K105
INPUT SENS SI0
S20 PRESET-VAR LEVEL
+15V
-15V
FEEDBACK AMPLIFIER
U16
INPUT AMPLIFIER
Q130 Q132 Q232
Q136 Q141 Q236 Q241
BANDWIDTH SELECTION
TRIGGER AMPLIFIER
Q147 Q247
TRIGGER GENERATOR Q152 Q154 Q252 Q254
S22 SLOPE
SLOPE SWITCHING Q259 K152 K252
GATE Q170 Q180 Q270 Q275 Q278 Q280
GATE
FROM TIME BASE AND CONTROL
BINARY DRIVER
Q186 Q190 Q288 Q290
BINARY COUNTER VOLTAGE REGULATOR U305 Q317
BINARY COUNTER U329
CLOCK
CLEAR
TRIGGER INDICATOR PICKOFF
Q855 Q859
TRIGGER INDICATOR SIGNAL
TRIGGER SIGNAL
Q339
2^0
BCD ENCODER
0-1
2-3
4-5
6-7
8-9
U420
U434
2^1
2^2
2^3
QUINARY DRIVER Q341 Q345
QUINARY (RING) COUNTER Q362 Q364 Q374 Q376 Q382 Q384 Q390 Q392 Q400 Q402
10
CARRY COMPARATOR Q405 Q407 Q417
CARRY
10^0 BCD
DECADE COUNTERS U440 U442 U444 U446 U448 U450 U452
10^1BCD
10^2BCD
10^4BCD
10^8BCD
10^1BCD
STORAGE REGISTERS U455 U457 U459 U461 U463 U465 U467 U469
10^0
10^1
10^2
10^4
10^8
MULTIPLEXERS U520 U524 U528 U532 U536 U540 U544 U548
DIGITAL-TO-ANALOG CONVERTER U560
CHANNEL 1 COLUMN AND ROW OUTPUTS
OVER-RANGE INDICATOR Q581
DECIMAL LOGIC Q653 Q658 Q663 Q670
TIME-SLOT OUTPUTS
TIME-SLOT OVERFLOW U531 U541
DISPLAY
DCU RESET
FULL COUNT
OVERFLOW REGISTER Q512 U504B U504C U508B U508A U510S
OVERFLOW
ZERO-CANCEL LOGIC U500 U502 U504A U506A U506B U506C U508A U508C U508D U514
INTERNAL TO TIME BASE AND CONTROL CIRCUIT
MEASUREMENT INTERVAL SWITCH LOGIC
MEASUREMENT UNITS Q680
CHANNEL 2 COLUMN AND ROW OUTPUTS
INTERFACE CONNECTOR
TRIGGER SIGNAL FROM INTERFACE CONNECTOR
TRIGGER SOURCE AMPLIFIER
Q218 Q218
+5V
ZERO
-15V
S50 REF FREQ/CH B
5MHz OSCILLATOR Y600
DIVIDE BY FIVE COUNTER U602
1MHz
INT 1MHz
EXT IN
MONITOR/EXT IN
MONITOR BUFFER Q606
CHANNEL B INPUT SHAPER Q613 Q618 Q623
INTERNAL FROM READOUT ENCODING CIRCUIT
REFERENCE FREQUENCY GATI U731D U729E
DISPLAY GENERATOR U729D Q791
DISPLAY TIME R730/570
DCU RESET DRIVER Q796 Q798 U731A
DCU RESET
LAMP DRIVER Q776
GATE D580
+15V
GATE GENERATOR
S600 RESET
RESET INPUT Q703 Q738 U708C U708D
SET RESET U733A
TIME-BASE INPUT U733B
GATE FLIP-FLOP U735
GATE OUTPUT U75 - 53 Q756 Q763 Q768
GATE
GATE
TO CHANNEL A GATE
TIME-BASE DECADE COUNTERS U628 U630 U632 U634 U636 U638 U640
1ms
10ms
100ms
1s
10s
Q4,0
FROM DCU RESET
MEASUREMENT INTERVAL S604B
MONITOR/ EXT GATE
MANUAL/EXTERNAL GATE INPUT U708A U708B U714 U729A U729B U742
DISPLAY ENABLE U729C U731B U73K
DISPLAY
OFF
ON
5770 MANUAL GATE STORAGE
GATE BUFFER Q747

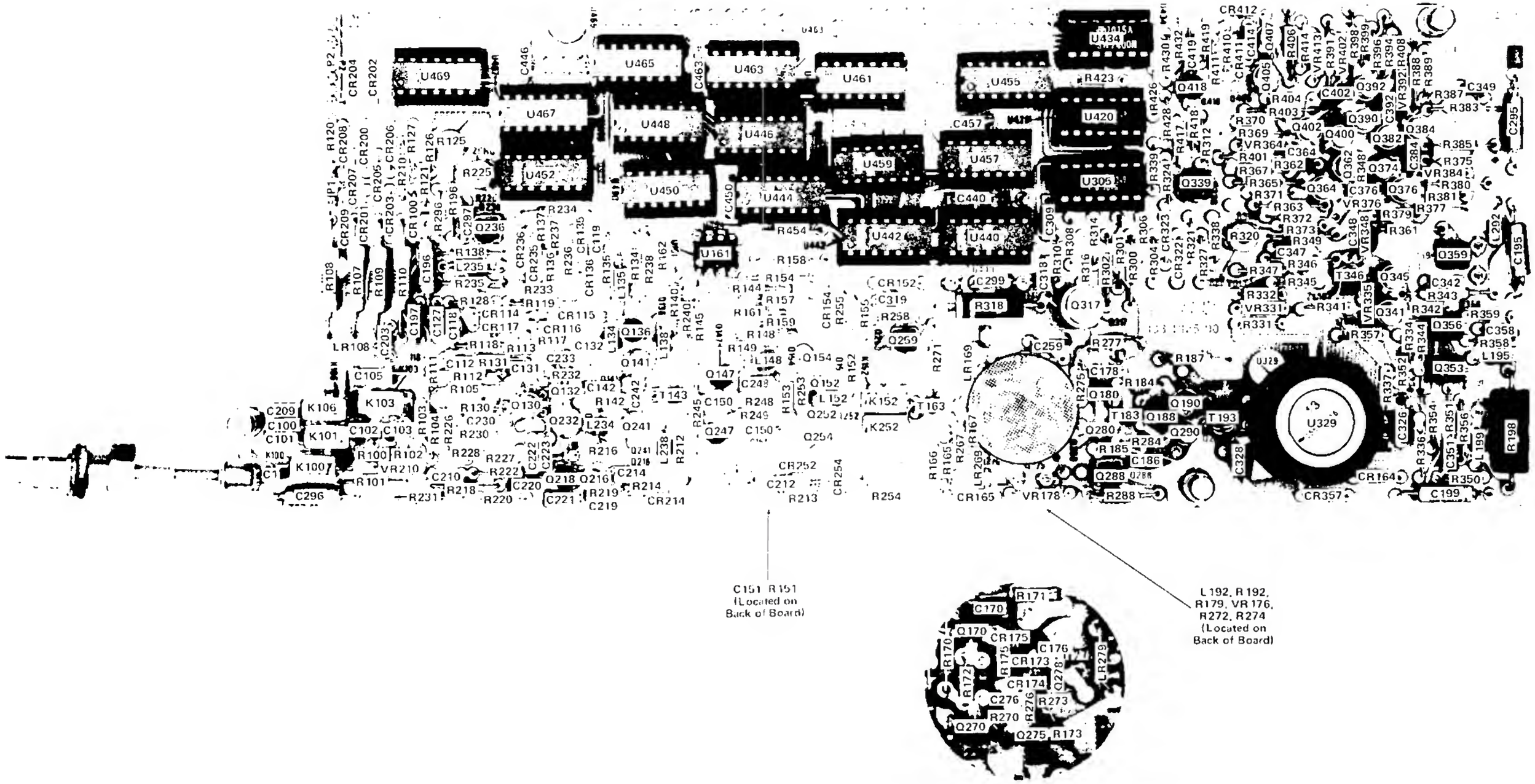

A1 High Frequency Counter Circuit Board Assembly

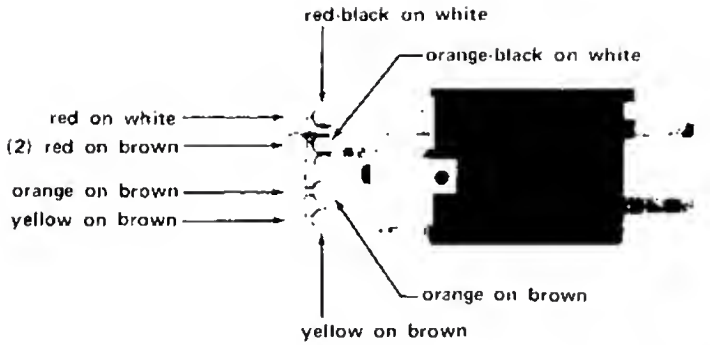

A3 TRIGGER Switch

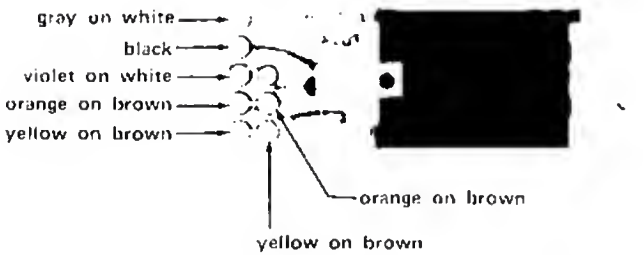

A4 BANDWIDTH Switch

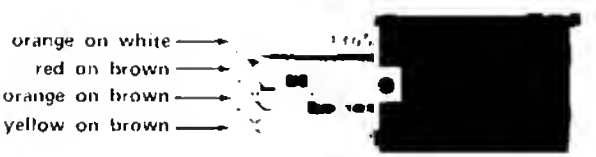

A5 COUPLING Switch

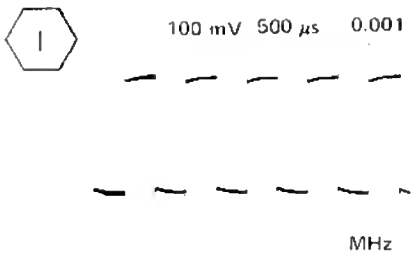
1
100 mV 500 µs 0.001
MHz

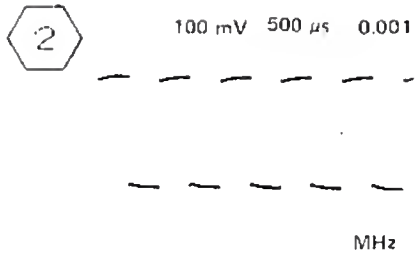
2
100 mV 500 µs 0.001
MHz

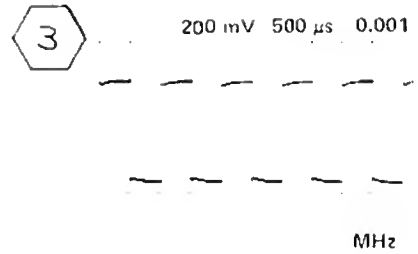
3
200 mV 500 µs 0.001
MHz

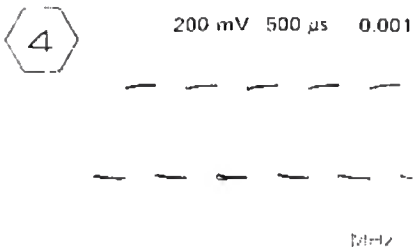
4
200 mV 500 µs 0.001
MHz

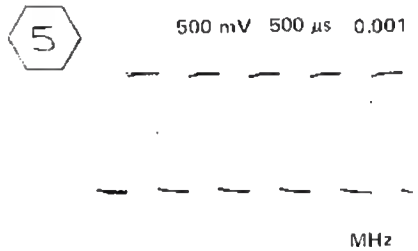
5
500 mV 500 µs 0.001
MHz

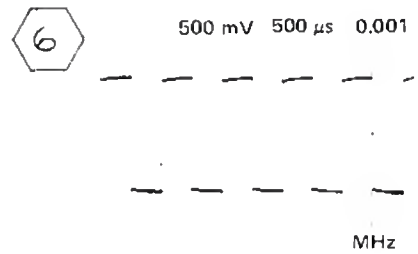
6
500 mV 500 µs 0.001
MHz

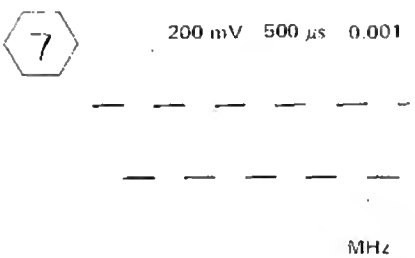
7
200 mV 500 µs 0.001
MHz

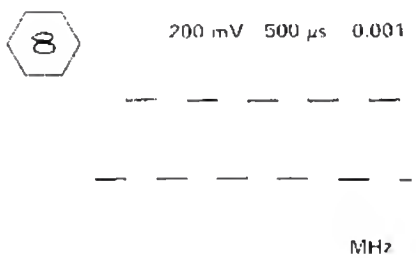
8
200 mV 500 µs 0.001
MHz

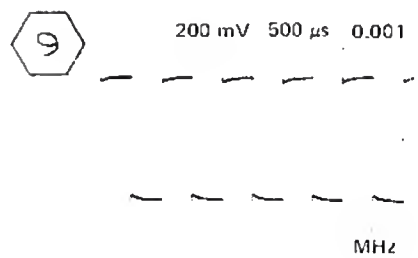
9
200 mV 500 µs 0.001
MHz

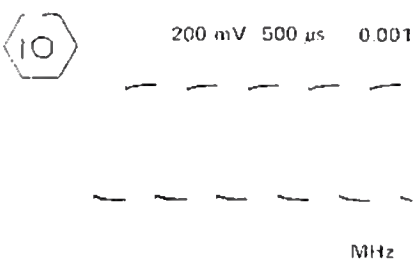
10
200 mV 500 µs 0.001
MHz

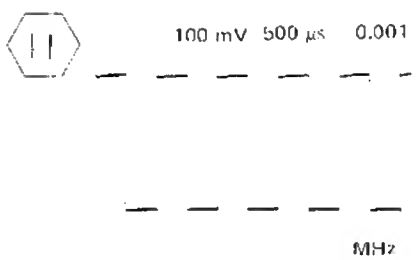
11
100 mV 500 µs 0.001
MHz

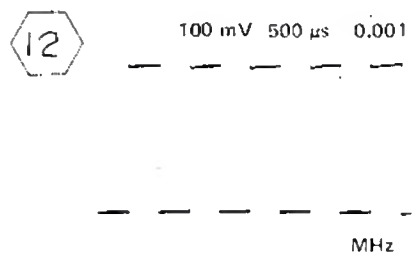
12
100 mV 500 µs 0.001
MHz

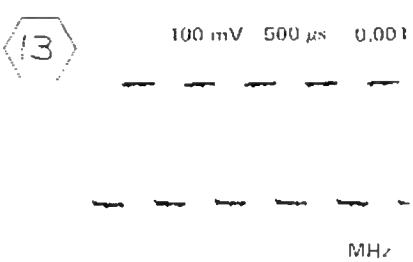
13
100 mV 500 µs 0.001
MHz

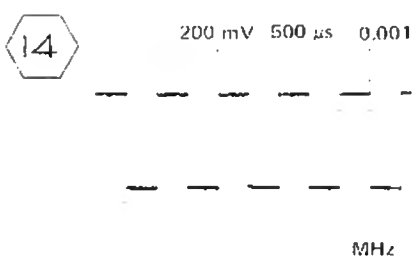
14
200 mV 500 µs 0.001
MHz

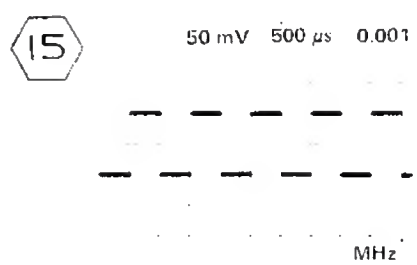
15
50 mV 500 µs 0.001
MHz

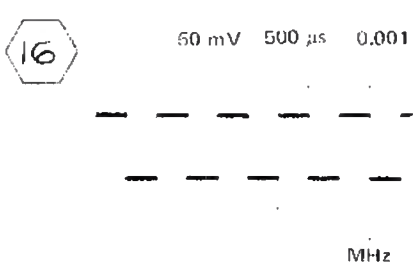
16
50 mV 500 µs 0.001
MHz

P/O A3 TRIGGER SW BOARD

P/O A5 COUPLING SW BOARD

P/O A1 HIGH FREQ COUNTER BOARD

P/O A2 LOGIC BOARD

P/O A4 BANDWIDTH BOARD

P/O A2 LOGIC BOARD

IC SOCKET DETAIL

NOTE:

SEE PARTS LIST FOR SEMICONDUCTOR TYPES

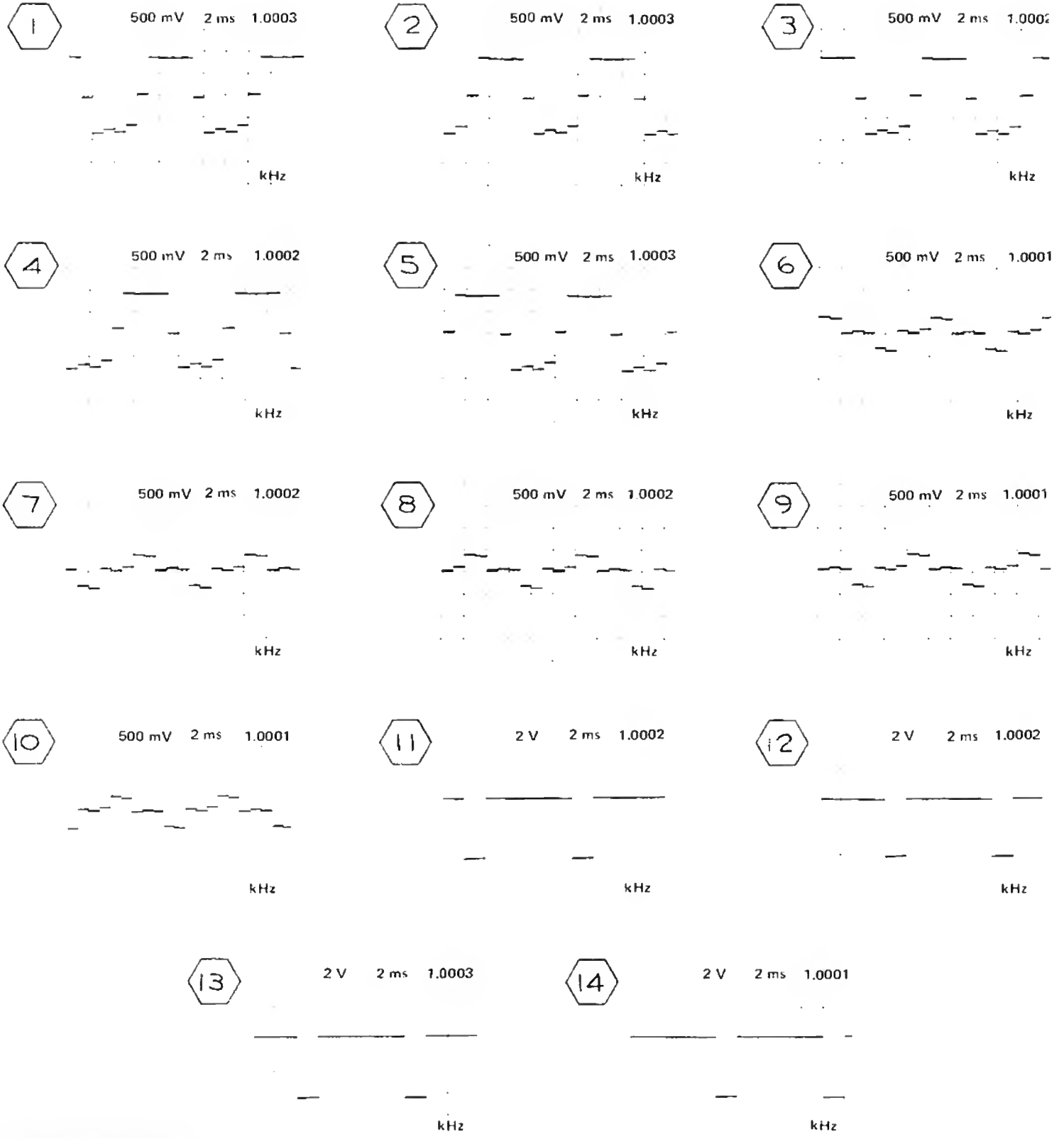
1
500 mV 2 ms 1.0003
kHz
2
500 mV 2 ms 1.0003
kHz
3
500 mV 2 ms 1.0002
kHz
4
500 mV 2 ms 1.0002
kHz
5
500 mV 2 ms 1.0003
kHz
6
500 mV 2 ms 1.0001
kHz
7
500 mV 2 ms 1.0002
kHz
8
500 mV 2 ms 1.0002
kHz
9
500 mV 2 ms 1.0001
kHz
10
500 mV 2 ms 1.0001
kHz
11
2 V 2 ms 1.0002
kHz
12
2 V 2 ms 1.0002
kHz
13
2 V 2 ms 1.0003
kHz
14
2 V 2 ms 1.0001
kHz

VOLTAGES obtained under conditions given on page 7-2.

WAVEFORMS obtained under conditions given on page 7-2. MEASUREMENT INTERVAL set to 10 ms position. Time-base unit externally triggered from test point 418

IC SOCKET DETAIL

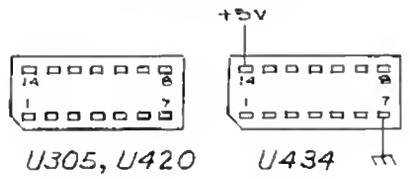

NOTE

SEE PARTS LIST FOR SEMICONDUCTOR TYPES

P/O A1 HIGH FREQ COUNTER BOARD

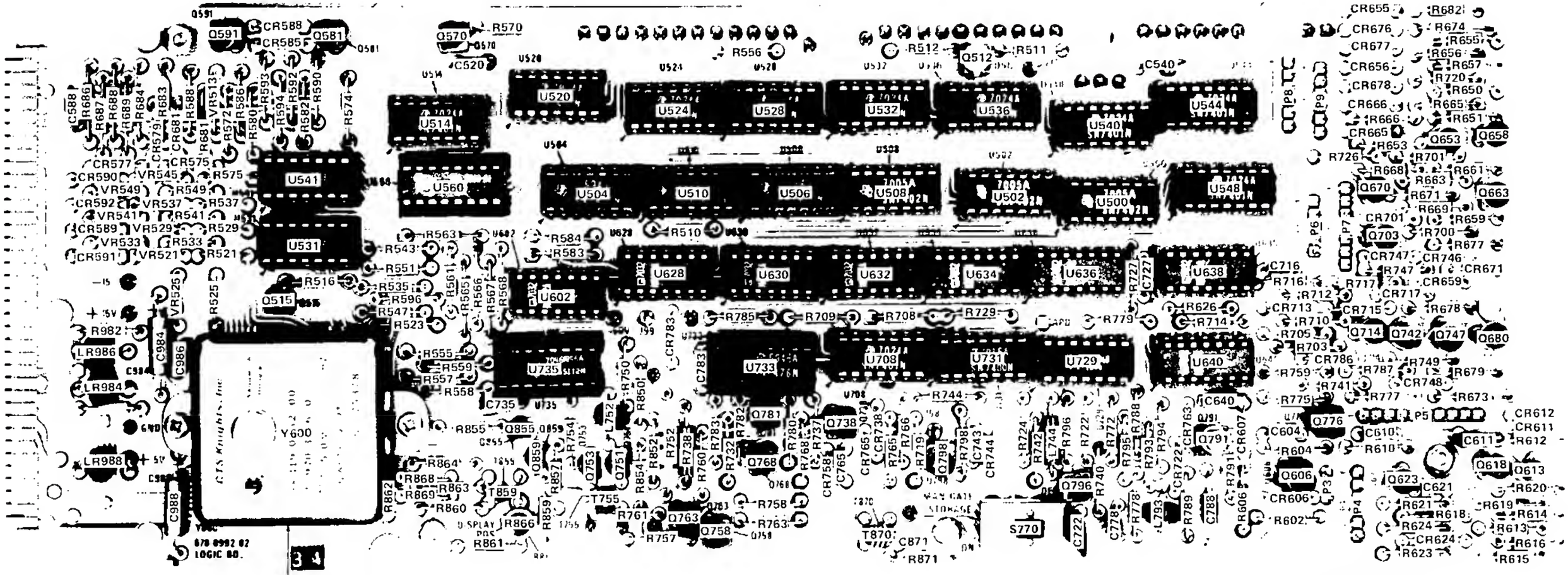

A2 Logic Circuit Board Assembly

P/O A2 LOGIC BOARD

P/O A1 HIGH FREQ COUNTER BOARD

IC SOCKET DETAIL

C440, C444, C450, C454, C460, C464, C524, C540 .01

U44C, U446, U450, U457, U463, U520, U540

U531, U541

ALL OTHERS

COUNTER (3)

P/O A2 LOGIC BOARD

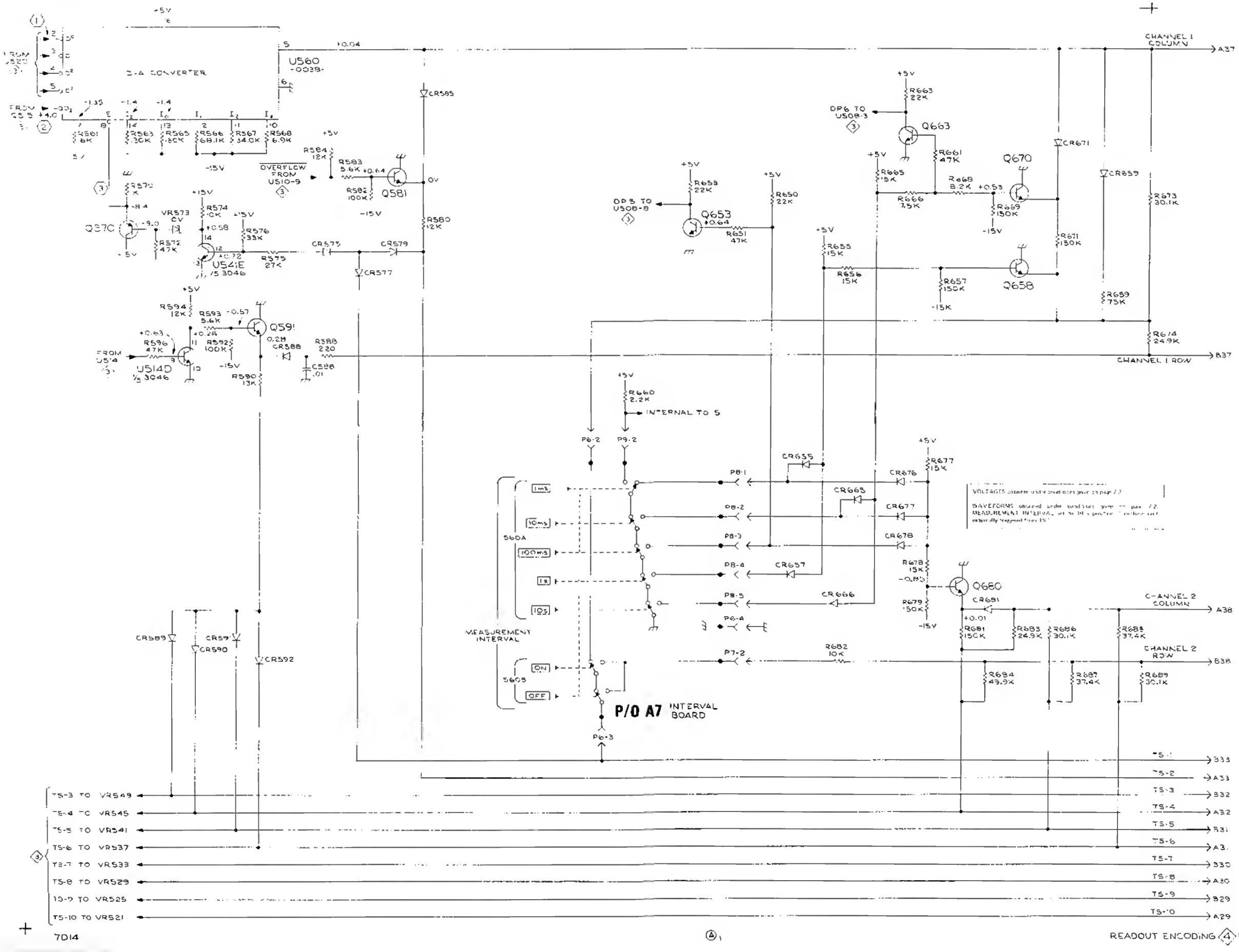

7D14

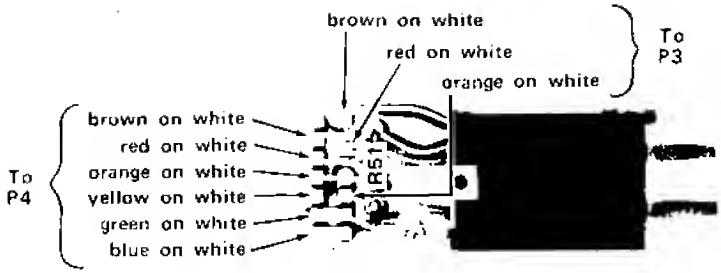

A6 REF FREQ Switch

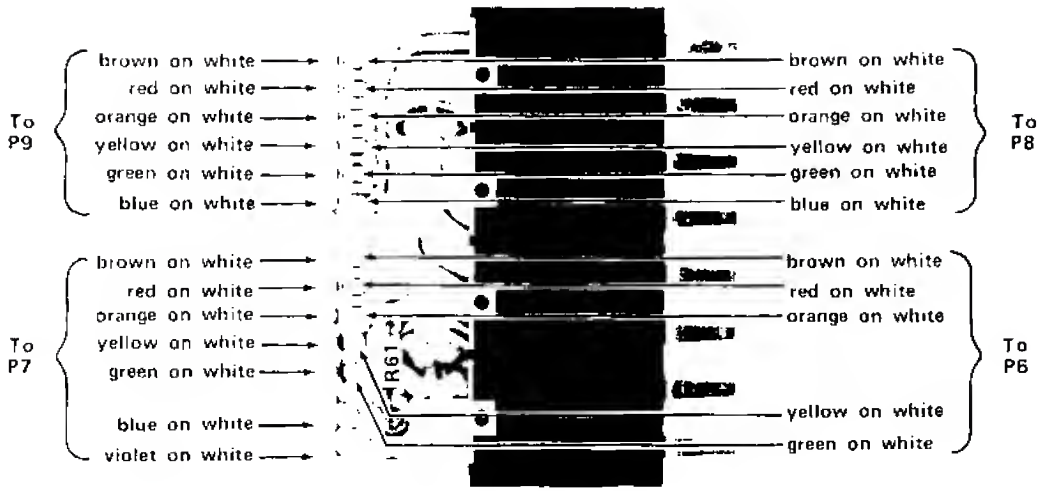

A7 INTERVAL Switch

P/O A6 REF FREQ SW BOARD

P/O A6 REF FREQ SW BOARD

IC SOCKET DETAIL

P/O A2 LOGIC BOARD

P/O A7 INTERVAL BOARD

VOLTAGES obtained under conditions given on page 7-2.

For WAVEFORMS see Section 3.

TIME BASE & CONTROL 0371 5

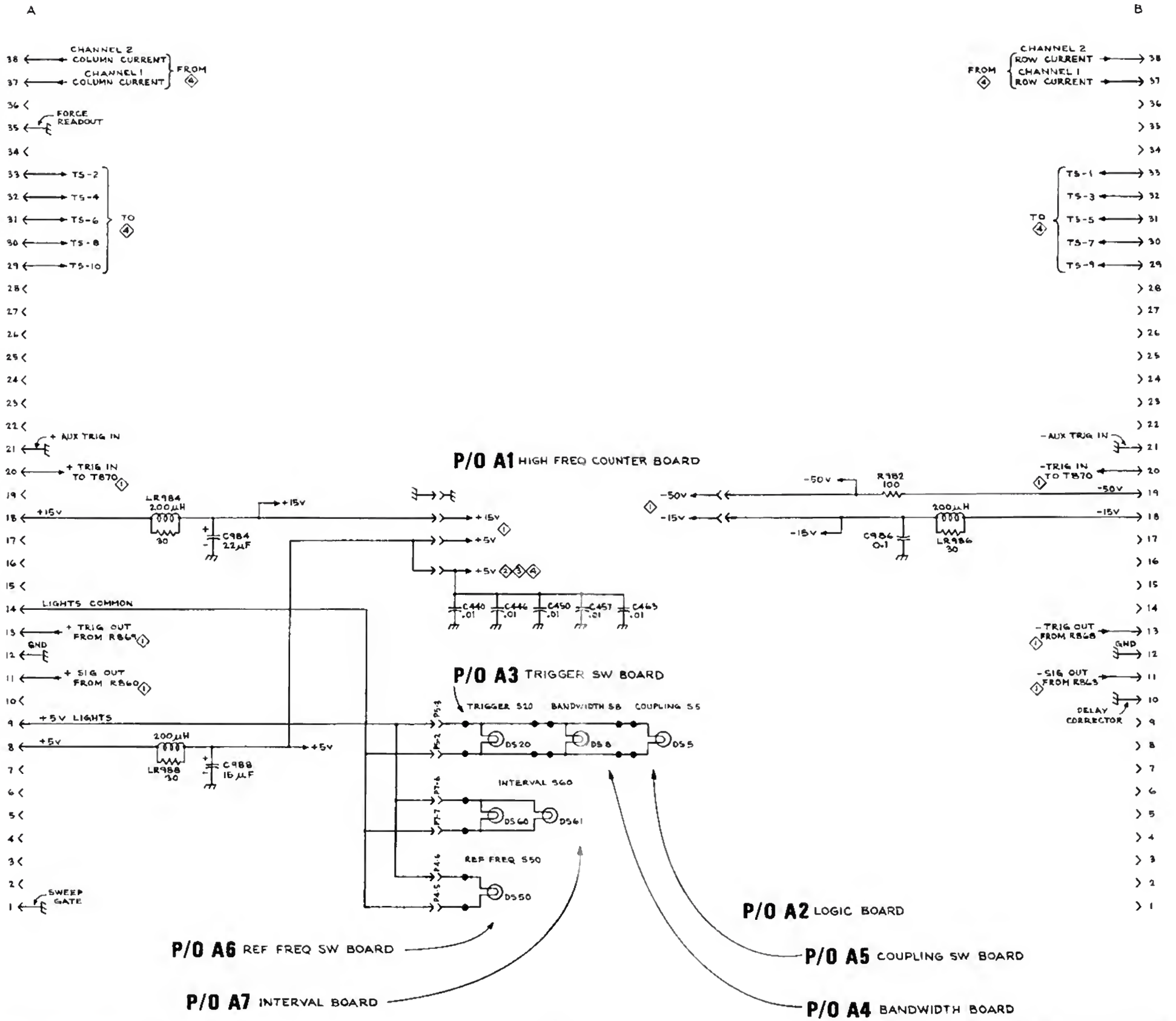

7D14

(A)

CONNECTOR TO MAIN FRAME

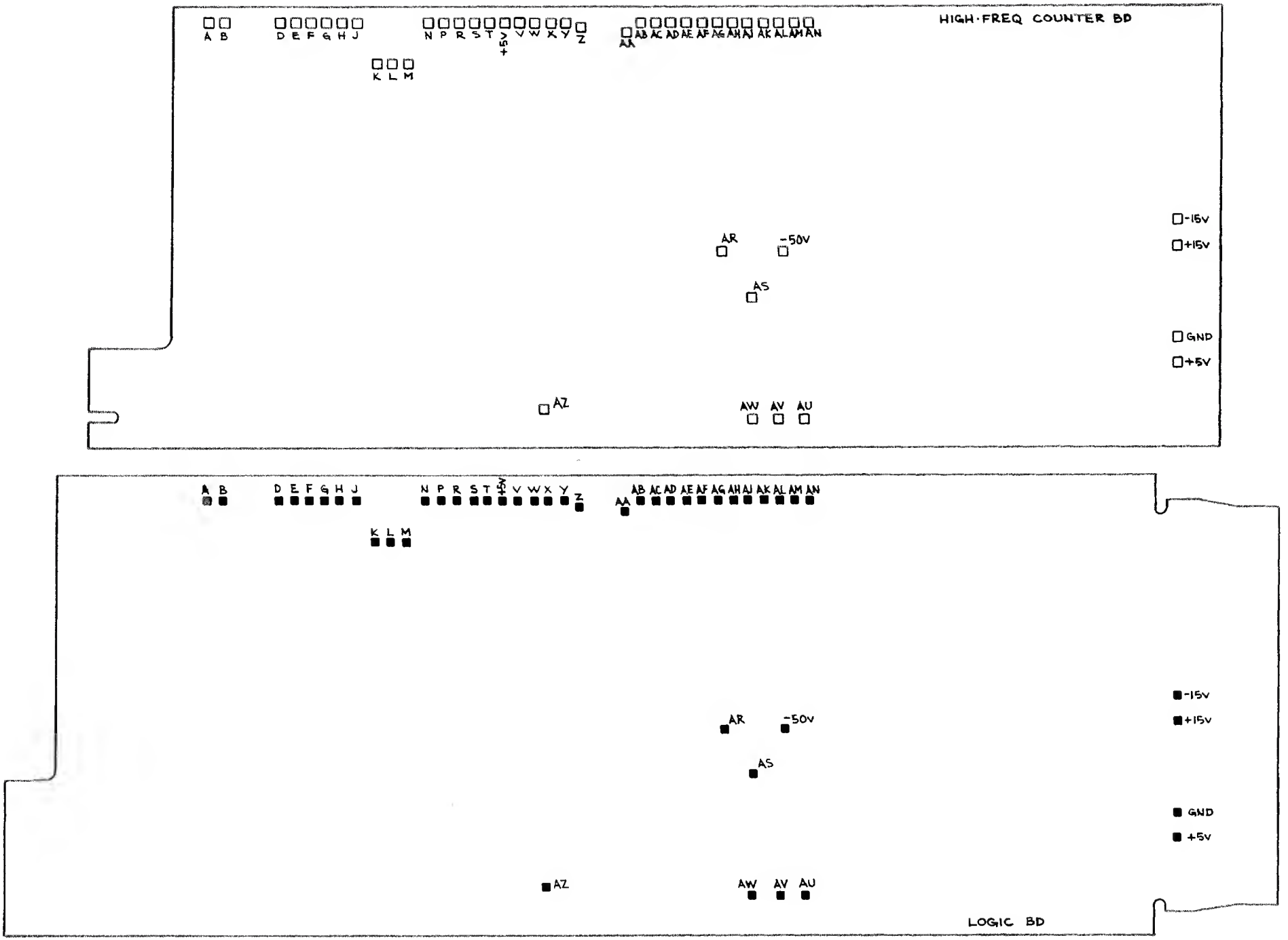
HIGH-FREQ COUNTER BD
A B
D E F G H J
N P R S T +5V V W X Y Z
AA AB AC AD AE AF AG AH AJ AK AL AM AN
K L M
AR
-50V
AS
-15V
+15V
GND
+5V
AZ
AW AV AU
A B
D E F G H J
N P R S T +5V V W X Y Z
AA AB AC AD AE AF AG AH AJ AK AL AM AN
K L M
AR
-50V
AS
-15V
+15V
GND
+5V
AZ
AW AV AU
LOGIC BD

FIGURE AND INDEX NUMBERS

Items in this section are referenced by figure and index numbers to the illustrations which appear either on the back of the diagrams or on pullout pages immediately following the diagrams of the instruction manual.

INDENTATION SYSTEM

This mechanical parts list is indented to indicate item relationships. Following is an example of the indentation system used in the Description column.

Assembly and/or Component
Detail Part of Assembly and/or Component
mounting hardware for Detail Part
Parts of Detail Part
mounting hardware for Parts of Detail Part
mounting hardware for Assembly and/or Component

Mounting hardware always appears in the same indentation as the item it mounts, while the detail parts are indented to the right. Indented items are part of, and included with, the next higher indentation.

Mounting hardware must be purchased separately, unless otherwise specified.

PARTS ORDERING INFORMATION

Replacement parts are available from or through your local Tektronix, Inc. Field Office or representative.

Changes to Tektronix instruments are sometimes made to accommodate improved components as they become available, and to give you the benefit of the latest circuit improvements developed in our engineering department. It is therefore important, when ordering parts, to include the following information in your order: Part number, instrument type or number, serial or model number, and modification number if applicable.

If a part you have ordered has been replaced with a new or improved part, your local Tektronix, Inc. Field Office or representative will contact you concerning any change in part number.

Change information, if any, is located at the rear of this manual.

ABBREVIATIONS AND SYMBOLS

For an explanation of the abbreviations and symbols used in this section, please refer to the page immediately preceding the Electrical Parts List in this instruction manual.

INDEX OF
MECHANICAL PARTS LIST ILLUSTRATIONS

Title	Page Nos. of Parts List
Figure 1 Exploded & Standard Accessories	8-1 thru 8-4
Figure 2 Repackaging	***(parts list combined with illustration)***

SECTION 8
MECHANICAL PARTS LIST

FIGURE 1 EXPLODED & STANDARD ACCESSORIES

Fig. & Index No.	Tektronix Port No.	Seriol/Model No. Eff	Disc	Qty	1 2 3 4 5	Description
1-1	366-1064-00			1		KNOB, chorcool—LEVEL/SLOPE
	- - - - - -			-		knob includes:
	213-0153-00			1		SETSCREW, 5-40 x 0.125 inch, HSS
-2	354-0342-00			1		RING, knob skirt
-3	366-1028-00			1		KNOB, chorcoal—P-P VOLTS
	- - - - - -			1		knob includes:
	213-0153-00			2		SETSCREW, 5-40 x 0.125 inch, HSS
-4	366-1189-00			1		KNOB, charcool—DISPLAY TIME
	- - - - - -			-		knob includes:
	213-0153-00			1		SETSCREW, 5-40 x 0.125 inch, HSS
-5	366-1058-22			1		KNOB, lotch
	- - - - - -			-		mounting hordware: *(not included w/knob)*
-6	214-1095-00			1		PIN, spring, split
-7	105-0076-00			1		RELEASE BAR, lotch
-8	214-1280-00			1		SPRING, helicol compression
-9	214-1054-00			1		SPRING, flot, lotch detent
-10	105-0075-00			1		BOLT, lotch detent
-11	333-1376-00			1		PANEL, front
-12	348-0235-00			2		SHIELDING GASKET, electricol
-13	352-0157-00			1		HOLDER, lomp
-14	378-0602-00			1		LENS, indicotor light, green
-15	200-0935-00			1		CAP, lomp holder
-16	131-0282-00			2		CONNECTOR, receptocle, 1 contoct, *w/hordware*
-17	136-0387-00			1		JACK TIP, ponel mounted
	- - - - - -			1		RESISTOR, vorioble
	- - - - - -			-		resistor includes:
-18	- - - - - -			1		RESISTOR, vorioble
-19	214-1235-00			1		DRIVE, turns reduction, 3:1
	- - - - - -			-		mounting hordwore: *(not included w/resistor)*
-20	210-0590-00			1		NUT, hex., 0.375-32 x 0.438 inch
-21	- - - - - -			1		RESISTOR, vorioble
	- - - - - -			-		mounting hordwore: *(not included w/resistor)*
-22	210-0583-00			1		NUT, hex., 0.25-32 x 0.312 inch
-23	260-1219-00			1		SWITCH, rotory—P-P VOLTS, unwired
	- - - - - -			-		mounting hordware: *(not included w/switch)*
-24	210-0590-00			1		NUT, hex., 0.375-32 x 0.438 inch

FIGURE 1 EXPLODED & STANDARD ACCESSORIES (cont)

Fig. & Index No.	Tektronix Part No.	Serial/Model No. Eff	Serial/Model No. Disc	Qty	1 2 3 4 5	Description
1-25	670-1326-01			1		CIRCUIT BOARD ASSEMBLY, switch—INTERVAL A7
	- - - - - -			-		mounting hardware: *(not included w/circuit board assembly)*
-26	211-0156-00			3		SCREW, 1-72 x 0.25 inch, 82° csk, FHS
-27	670-1324-00			1		CIRCUIT BOARD ASSEMBLY, switch—TRIGGER A3
	- - - - - -			-		mounting hardware: *(not included w/circuit board assembly)*
-28	211-0156-00			1		SCREW, 1-72 x 0.25 inch, 82° csk, FHS
-29	670-1325-00			1		CIRCUIT BOARD ASSEMBLY, switch—REF FREQ A6
	- - - - - -			-		mounting hardware: *(not included w/circuit board assembly)*
-30	211-0156-00			1		SCREW, 1-72 x 0.25 inch, 82° csk, FHS
-31	670-1327-01			1		CIRCUIT BOARD ASSEMBLY, switch—BANDWIDTH A4
	- - - - - -			-		mounting hardware: *(not included w/circuit board assembly)*
-32	211-0156-00			1		SCREW, 1-72 x 0.25 inch, B2° csk, FHS
-33	670-1328-00			1		CIRCUIT BOARD ASSEMBLY, switch—COUPLING A5
	- - - - - -			-		mounting hardware: *(not included w/circuit board assembly)*
-34	211-0156-00			1		SCREW, 1-72 x 0.25 inch, B2° csk, FHS
-35	386-1447-49			1		SUBPANEL, front
	- - - - - -			-		mounting hardware: *(not included w/subpanel)*
-36	213-0192-00			4		SCREW, thread forming, 6-32 x 0.50 inch, Fil HS
-37	670-0993-00			1		CIRCUIT BOARD ASSEMBLY—HIGH FREQ COUNTER A1
	- - - - - -			-		circuit board assembly includes:
	388-1B25-00			1		CIRCUIT BOARD
-3B	131-0608-00			11		TERMINAL, pin, 0.365 inch long
-39	136-0183-00			1		SOCKET, transistor, 3 pin
-40	136-0220-00			8		SOCKET, transistor, 3 pin, square
-41	136-0252-00			53		SOCKET, pin connector
-42	136-0263-03			46		SOCKET, pin terminol
-43	136-0269-00			18		SOCKET, integrated circuit, 14 pin
-44	136-0350-00			22		SOCKET, tronsistor, 3 pin, low profile
-45	136-0399-00			8		SOCKET, terminal
	175-1210-00			1		CABLE, ASSEMBLY, RF
	- - - - - -			-		cable assembly includes:
-46	131-0818-00			1		CONNECTOR, receptocle, BNC, w/hardwore
-47	210-0774-00			1		EYELET, 0.152 inch OD
	210-0775-00			1		EYELET, 0.126 inch OD
-48	214-0579-00			6		PIN, test point
-49	361-0238-00			5		SPACER, sleeve
-50	211-0155-00			5		SCREW, relieved body 4-40 x 0.22 inch long

FIGURE 1 EXPLODED & STANDARD ACCESSORIES (cont)

Fig. & Index No.	Tektronix Part No.	Serial/Model No. Eff	Serial/Model No. Disc	Qty	1 2 3 4 5	Description
1-51	214-1497-00			1		HEAT SINK
	- - - - - -			-		mounting hardware: *(not included w/heat sink)*
-52	211-0116-00			2		SCREW, sems, 4-40 x 0.312 inch, PHB
-53	342-0093-00			1		INSULATOR, integrated circuit
-54	670-0992-02			1		CIRCUIT BOARD ASSEMBLY—LOGIC A2
	- - - - - -			-		circuit board assembbly includes:
	388-1824-02			1		CIRCUIT BOARD
-55	- - - - - -			1		OSCILLATOR, RF
	- - - - - -			-		mounting hardware: *(not included w/oscillator)*
-56	211-0116-00			2		SCREW, sems, 4-40 x 0.312 inch, PHB
-57	351-0213-00			2		GUIDE-POST, lock, 0.285 inch h
-58	131-0566-00			1		LINK, terminal connecting
-59	131-0591-00			46		TERMINAL, pin, 0.835 inch long
-60	131-0608-00			43		TERMINAL, pin, 0.365 inch long
-61	136-0220-00			14		SOCKET, transistor, 3 pin, square
-62	136-0234-00			4		RECEPTACLE, electrical
-63	136-0260-01			3		SOCKET, integrated circuit, 16 pin
-64	136-0269-00			28		SOCKET, integrated circuit, 14 pin
-65	136-0350-00			17		SOCKET, transistor, 3 pin, low profile
-66	214-0579-00			3		PIN, test point
-67	260-0723-00			1		SWITCH, slide, S70
-68	351-0225-00			5		GUIDE-POST, lock, 0.775 inch long
	- - - - - -			-		mounting hardware: *(not included w/circuit board assembly)*
-69	211-0105-00			6		SCREW, 4-40 x 0.188 inch, 100° csk, FHS
-70	220-0547-01			6		NUT, black, 0.25 x 0.282 x 0.38 inch
-71	211-0116-00			6		SCREW, sems, 4-40 x 0.312 inch, PHB
-72	214-1140-00			5		SPRING, helical compression
-73	337-1409-00			1		SHIELD, electrical
-74	386-1402-00			1		PANEL, rear
	- - - - - -			-		mounting hardware: *(not included w/panel)*
-75	213-0192-00			4		SCREW, thread forming, 6-32 x 0.50 inch, Fil HS
-76	361-0326-00			1		SPACER, sleeve, 0.18 ID x 0.25 OD x 0.10 inch long
-77	426-0505-07			1		FRAME SECTION, top
-78	214-1061-00			1		SPRING, flat, sliding ground
-79	426-0499-07			1		FRAME SECTION, bottom
-80	337-1064-00			2		SHIELD, electrical, side
-81	179-1628-00			1		WIRING HARNESS, high frequency
	- - - - - -			-		wiring harness includes:
-82	131-0707-00			11		CONNECTOR, terminal
-83	352-0161-01			1		HOLDER, terminal connector, 3 wire *(brown)*
-84	352-0166-02			1		HOLDER, terminal connector, 8 wire *(red)*
	179-1629-00			1		WIRING HARNESS, logic
	- - - - - -			-		wiring harness includes:
	131-0707-00			10		CONNECTOR, terminal
-85	352-0168-05			1		HOLDER, terminal connector, 10 wire *(green)*

FIGURE 1 EXPLODED & STANDARD ACCESSORIES (cont)

Fig. & Index No.	Tektronix Port No.	Seriol/Model No. Eff	Seriol/Model No. Disc	Qty	1 2 3 4 5	Description
1-86	175-0826-00			ft		WIRE, electricol, 3 wire ribbon, 2.875 inches long
-87	175-0828-00			ft		WIRE, electricol, 5 wire ribbon, 3 inches long
-88	175-0829-00			ft		WIRE, electricol, 6 wire ribbon, 5.50 inches long
-89	175-0830-00			ft		WIRE, electricol, 7 wire ribbon, 2.75 inches long
	131-0707-00			33		CONNECTOR, terminol
	352-0161-03			1		HOLDER, terminol connector, 3 wire *(orange)*
-90	352-0163-06			1		HOLDER, terminol connector, 5 wire *(blue)*
	352-0164-04			1		HOLDER, terminol connector, 6 wire *(yellow)*
	352-0164-08			1		HOLDER, terminol connector, 6 wire *(groy)*
	352-0164-09			1		HOLDER, terminol connector, 6 wire *(white)*
-91	352-0165-07			1		HOLDER, terminol connector, 7 wire *(violet)*

STANDARD ACCESSORIES

	103-0036-00			1		ADAPTER, BSM femole, BNC female *(not shown)*
	070-1097-00			1		MANUAL, instruction *(not shown)*

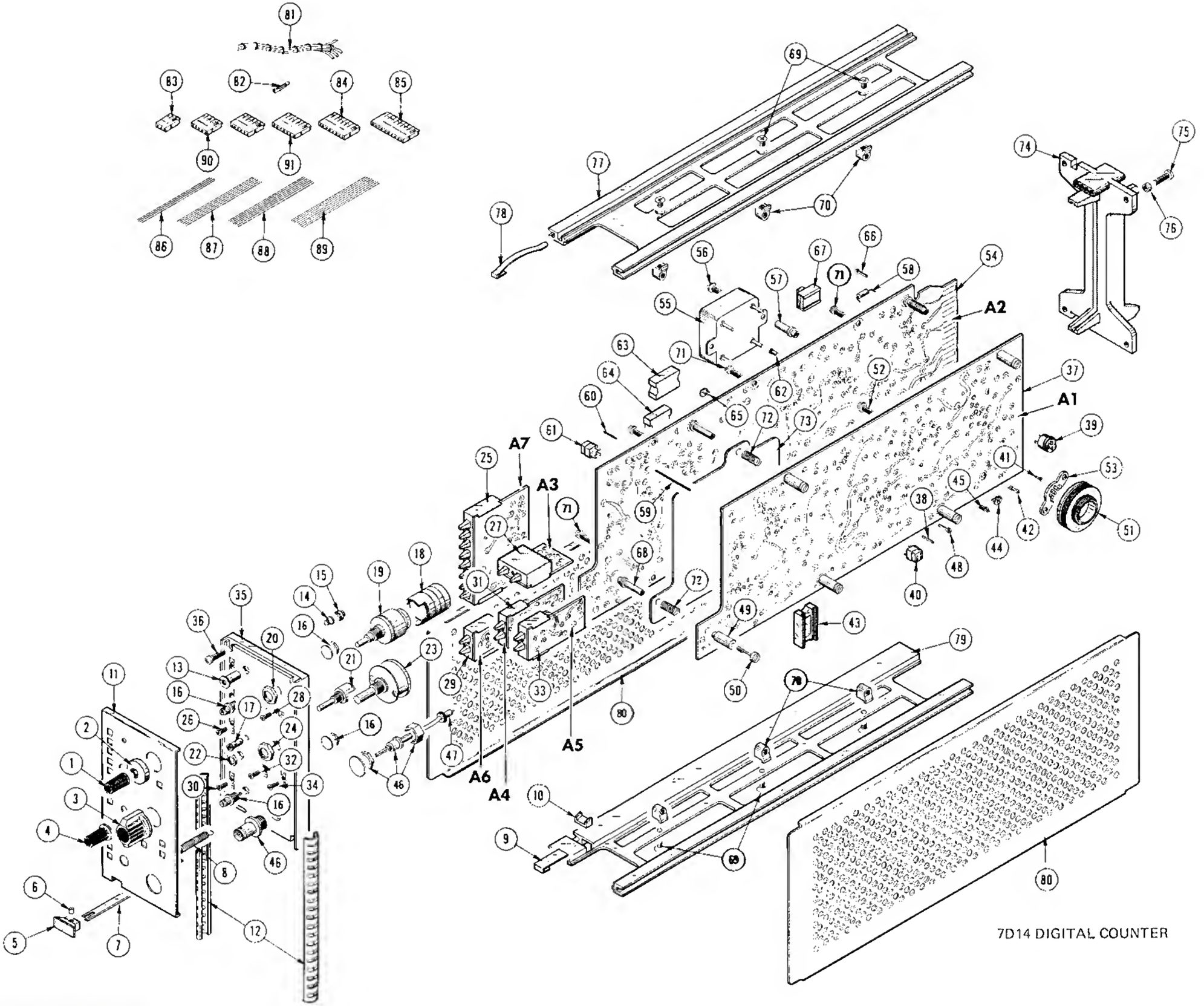
A1
A2
A3
A4
A5
A6
A7
7D14 DIGITAL COUNTER

CARTON ASSEMBLY
(Part No. 065-0125-00)

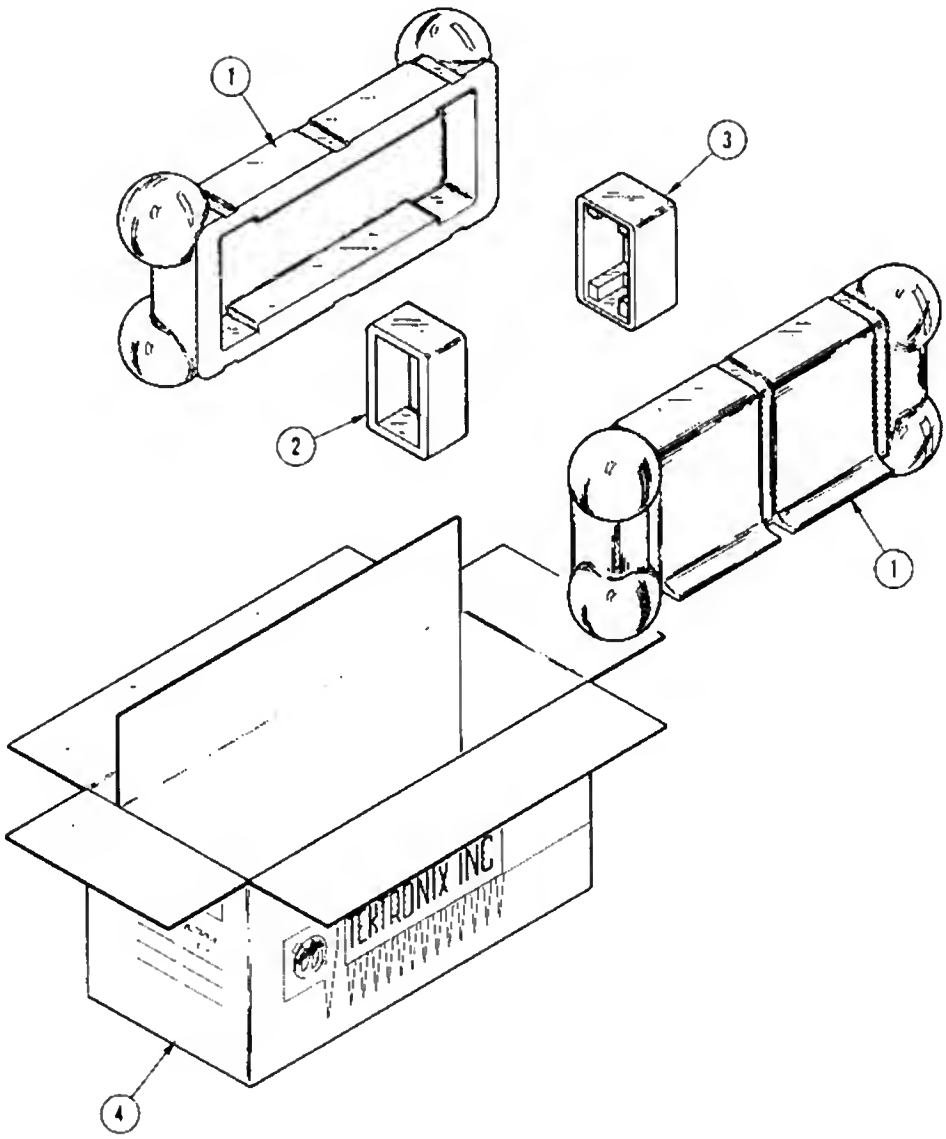

Fig. & Index No.	Tektronix Part No.	Serial/Model No. Eff	Disc	Qty 1 2 3 4 5	Description
	065-0125-00			1	ASSEMBLY, carton
	- - - - - -			.	assembly includes:
-1	004-0241-00			2	CASE HALF
-2	004-0242-00			1	END CAP, rear
-3	004-0243-00			1	END CAP, front
-4	004-0748-00			1	CARTON

MANUAL CHANGE INFORMATION

At Tektronix, we continuolly strive to keep up with latest electronic developments by adding circuit ond component improvements to our instruments as soon as they are developed ond tested.

Sometimes, due to printing ond shipping requirements, we con't get these chonges immediately into printed manuals. Hence, your manual may contain new change information on following pages.

A single change may affect several sections. Sections of the manual are often printed at different times, so some of the information on the change poges may olready be in your manuol. Since the change information sheets ore carried in the manual until ALL changes ore permanently entered, some duplication may occur. If no such change poges appeor in this section, your monual is correct as printed.